广东惠伦晶体科技股份有限公司
GUANGDONG FAITH LONG CRYSTAL TECHNOLOGY Co.,Ltd.
NO.68 Huangjiang Donghuan Road，Huangjiang Town，Dongguan City，Guangdong Province，China
TEL :+86(0)769-38879888 Fax :+86(0)769-38879889 E-mail : yl@dgylec.com

# PRODUCT SPECIFICATION SHEET

| | | |
|---|---|---|
| CUSTOMER | : | |
| PRODUCT TYPE | : | SMD X'TAL 2.0*1.6(4PAD) |
| NOMINAL FREQ. | : | 25.000000 MHz |
| FL P/N | : | 9S25000106 |
| REVISION | : | S0 |
| CUSTOMER P/N | : | |

CUSTOMER'S APPROVAL&DATE

FL CORPORATION

| APPROVED | CHECKED | DESIGNED |
|---|---|---|
| Xing Yue | Jin Qi | Li Xiang |

MSL1

RoHS Compliant

**CONTENTS** **PAGE**


- SPECIFICATION REVISION RECORD SHEET 2
- ELECTRICAL SPECIFICATIONS 3
- DIMENSIONS & MARKING 4
- STRUCTURE ILLUSTRATION 5
- RELIABILITY TEST SPECIFICATIONS 6
- PACKAGING REQUIREMENT 7/8
- SPECIFICATION OF THE ENVIRONMENT-RELATED SUBSTANCI 9


**ATTACHMENT（optional）**

- ELECTRICAL CHARACTERISTICS TEST A ☐ YES ☑ NO
- TEMPERATURE CHARACTERISTICS TEST B ☐ YES ☑ NO

**SPECIFICATION REVISION RECORD SHEET**

| Rev. | Revise page | Revise Contents | Date | Ref. No. | Reviser |
|---|---|---|---|---|---|
| S0 | N/A | Initial released | 26-Aug-22 | N/A | Li Xiang |
| | | | | | |
| | | | | | |
| | | | | | |
| | | | | | |
| | | | | | |
| | | | | | |
| | | | | | |
| | | | | | |
| | | | | | |
| | | | | | |
| | | | | | |
| | | | | | |
| | | | | | |
| | | | | | |
| | | | | | |
| | | | | | |
| | | | | | |
| | | | | | |
| | | | | | |
| | | | | | |
| | | | | | |
| | | | | | |
| | | | | | |

## PRODUCT DESCRIPION

**Standard atmospheric conditions**

Unless otherwise specified. The standard range of atmospheric conditions for making measurement and tests are as follow:

Ambient temperature 25±2℃
Relative humidity 40%~70%

If there is no doubt the results, measurement shall be made within the following limits:

Ambient temperature 25±2℃
Relative humidity : 40%~70%

**Measure equipment**

Electrical characteristics measured by S&A250B or equivalent.

**Crystal cutting type**

The crystal is using AT CUT (thickness shear mode)

## ELECTRICAL SPECIFICATIONS

| No. | Items | Electrical Spec. | | | | | Remarks |
|---|---|---|---|---|---|---|---|
| | | Symbol | Min | Typ | Max | Units | |
| 1 | Nominal Frequency | FL | 25.000000 | | | MHz | |
| 2 | Oscillation Mode | - | Fundamental | | | - | |
| 3 | Load Capacitance | CL | 8.0 | | | pF | |
| 4 | Frequency Tolerance | - | ±10 | | | ppm | at 25±2℃ |
| 5 | Frequency Stability | - | ±50 | | | ppm | at -40～+125℃ (reference 25℃) |
| 6 | Shunt Capacitance | C0 | - | - | 3 | pF | |
| 7 | Aging (/1 year) | - | ±3 | | | ppm/year | at 25±2℃ |
| 8 | Operating Temperature | - | -40 | - | 125 | ℃ | |
| 9 | Storage Temperature | - | -40 | - | 125 | ℃ | |
| 10 | Equivalent series resistance | ESR | - | - | 100 | ohms | |
| 11 | Insulation Resistance | IR | 500 | - | - | M-ohms | at DC 100V |
| 12 | ESD | - | HBM＞4000V | | | - | JESD22-A114-B |
| 13 | MSL | - | Level 1 | | | - | IPC/JEDEC J-STD-033C |
| 14 | Drive Level | DL | - | - | 100 | uW | |

## DIMENSIONS unit:mm

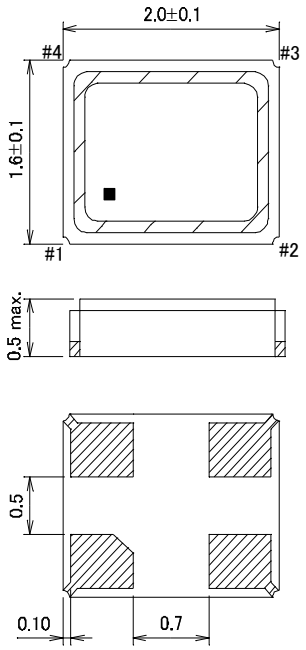


## CONNECTION DIAGRAM (TOP VIEW)

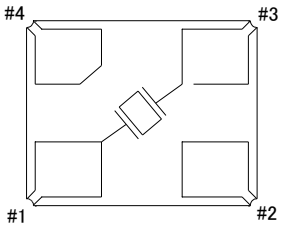


| Pin | Function |
|---|---|
| #1 | Xtal terminal (Input) |
| #2 | GND terminal |
| #3 | Xtal terminal (Output) |
| #4 | GND terminal |

## LAND PATTERN unit:mm

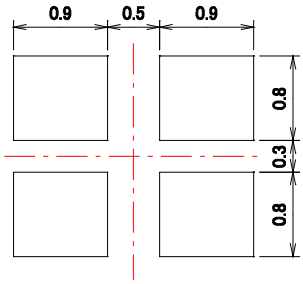


## MARKING

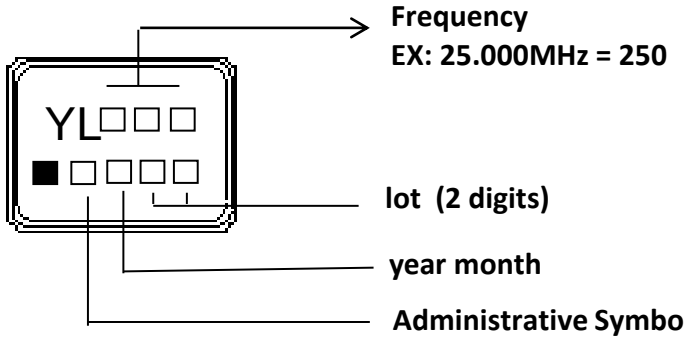


| year \ month | | JAN | FEB | MAR | APR | MAY | JUN | JUL | AUG | SEP | OCT | NOV | DEC |
|---|---|---|---|---|---|---|---|---|---|---|---|---|---|
| 2021 | 2025 | A | B | C | D | E | F | G | H | J | K | L | M |
| 2022 | 2026 | N | P | Q | R | S | T | U | V | W | X | Y | Z |
| 2023 | 2027 | a | b | c | d | e | f | g | h | j | k | l | m |
| 2024 | 2028 | n | p | q | r | s | t | u | v | w | x | y | z |

## SUGGESTED REFLOW PROFILE

Total time : 360 sec. Max.

Solder melting point :225 °C

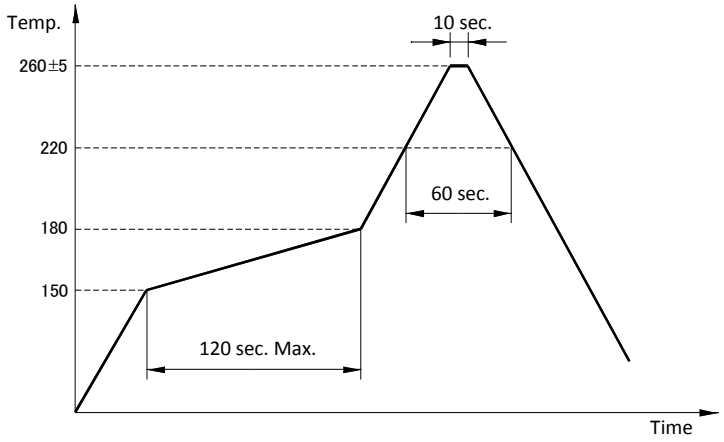

## STRUCTURE ILLUSTRATION

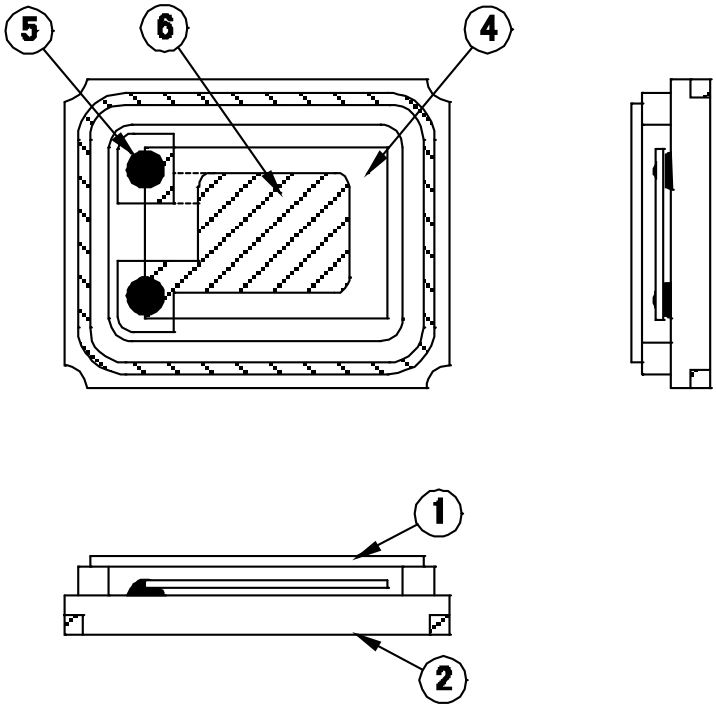


| NO | COMPONENTS | MATERIALS | QTY | FINISH/SPECIFICATIONS |
|---|---|---|---|---|
| 1 | Cap(Lid) | Kovar(Fe+Co+Ni) | 1 | Ni plating |
| 2 | Base(Package) | Almina Ceramics ($Al_2O_3$) | 1 | |
| 3 | Pad(Package) | Ni + Au | 4 | Ni+Au plating |
| 4 | Crystal blank | $SiO_2$ | 1 | - |
| 5 | Conductive adhesive | Ag | 2 | Silicone resin |
| 6 | Electrode | Noble metal | 2 | - |

## RELIABILITY SPECIFICATIONS

1.MECHANICAL ENDURANCE

| No. | Test Item | Test Methods | |
|---|---|---|---|
| 1 | Drop Test | 150 cm height, fall freely onto stainless plate 3 times. | JIS C6701 |
| 2 | Shock Test | 150g/150cm Height,3times in the direction of ±x, ±y, ±z on concrete floor | IEC-68-02-27 |
| 3 | Mechanical Shock | Device are shocked to half sine wave ( 1000 G ) three mutua pendicular axes each 3 times. 1.0m sec. duration time | MIL-STD-202F |
| 4 | Vibration | Frequency range 10 ~ 55 Hz<br>Amplitude 1.52 mm<br>Pendicular axes each test tim 2 hours（x,y,z Axis）<br>Total test time 6 hours | MIL-STD-883E |
| 5 | Gross Leak | Standard Sample For Automatic Gross Leak Detector Test Pressure 2kg/cm2 | MIL-STD-883E |
| 6 | Fine Leak | Helium Bombing 4.5kgf/cm2 for 2 hr | MIL-STD-883E |
| 7 | Solderability | Temperature 260 °C ±5 °C<br>Immersing depth 0.5 mm minimum<br>Immersion time 5 ± 1 seconds<br>Flux Rosin resin methyl alcohol solvent ( 1 : 4 ) | GB/T 2424.17-2008 / IEC 60068-2-44:1995; GB/T 2423.28-2005 / IEC 60068-2-20:1979 |
| 8 | Resistance To Soldering Heat | Pre-heat temperature 125 °C<br>Pre-heat time 60 ~ 120 sec.<br>Test temperature 260 +/- 5 °C<br>Test time 5 +/- 1 sec. | MIL-STD-202F |

*Storage conditions： 18 months

*Constant humidity： 40~70%

2.ENVIRONMENTAL ENDURANCE

| No. | Test Item | Test Methods | |
|---|---|---|---|
| 9 | High Temp. Storage | + 125 °C +/- 3 °C for 500 +/- 12 hours | MIL-STD-883E |
| 10 | Low Temp. Storage | - 40 °C +/- 3 °C for 500 +/- 12 hours | |
| 11 | Thermal Shock | Total 100 cycles of the following temperature cycle 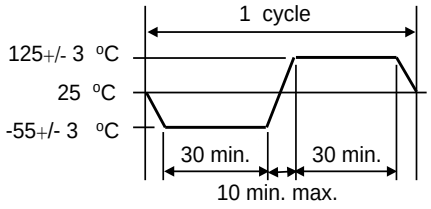  | MIL-STD-883E |
| 12 | High Temp&Homidity | 85℃±3℃, RH 85%,500Hrs | JIS C5023 |

**PACKING :**

8mm-4mm，3000pcs / reel，φ 178；

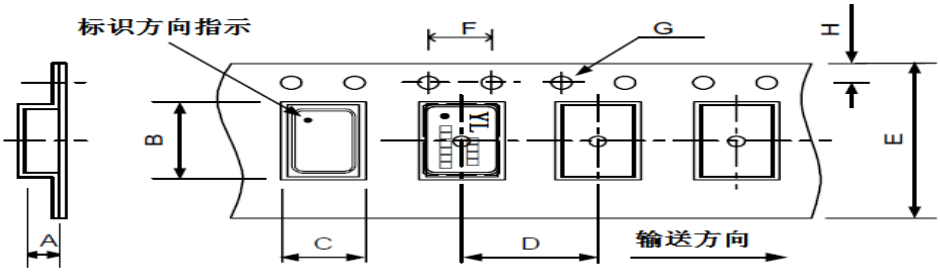


| | A | B | C | D | E | F | G | H | |
|---|---|---|---|---|---|---|---|---|---|
| Dimension | 0.65 ±0.1 | 2.20 ±0.1 | 1.90 ±0.1 | 4.00 | 8.00 | 4.00 | 1.50 | 1.75 | Unit：mm |

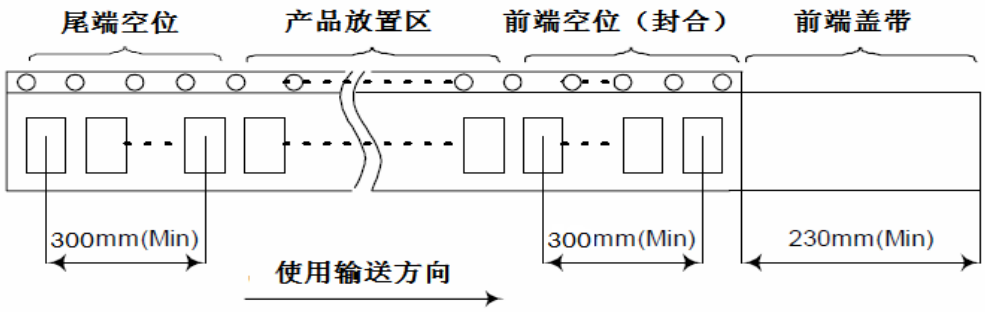


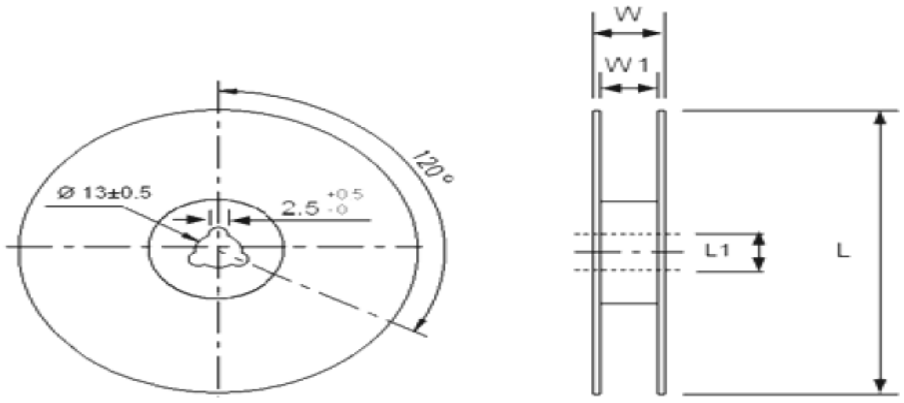


| Dimension | L | L1 | W | W1 | Unit：mm |
|---|---|---|---|---|---|
| | 178 | 13 | 11.5 | 8 | 3000pcs / reel |

## SMD PRODUCT PACKING STANDARD

### Out-going packing instruction

| Reel Packing | Inner Packing | Carton |
|---|---|---|
| name：reel<br>standard：diameter 18cm<br>material：plastics | name：Bubble Wrap<br>standard：430×330+20mm<br>material：HDPE(15 reels enter) | name：carton<br>standard：400×400×280mm<br>material：AB corrugated paper(4 bags enter) |
|  |  |  |
| | |  |

### The label instruction

| Label Drawing | Mark | Name of Article | Spec. | Size | Printing |
|---|---|---|---|---|---|
|  | L1 | 条码标签<br>Bar Code Label<br>(Chintz Paper) | 1.Part No.<br>2.Lot No.<br>3.Q'ty<br>4.Freq | 70x50mm | White |
|  | L2 | 条码标签<br>Bar Code Label<br>(Chintz Paper) | 1.Part No.<br>2.Date Code<br>3.Q'ty<br>4.Freq | 70x50mm | White |

### Remark

Specifications on the label is for the use of templates with different product specifications may vary.
If customer specified requirements for labels packaging. please provide the operation procedure.

| Range | Products | Packing Material |
|---|---|---|
| **Banned Substances** | **Maximum concentration ppm(mg/kg)** | **Maximum concentration ppm(mg/kg)** |
| 1.镉及镉化合物<br>Cadmium and cadmium compounds | 100 | 100 |
| 2.铅及铅化合物<br>Lead and lead compounds | 1000 | 100 |
| 3.汞及汞化合物<br>Mercury and mercury compounds | 1000 | 100 |
| 4.六价铬化合物<br>Hexavalent-Chromium VI (Cr+6) | 1000 | 100 |
| 5.聚溴联苯 PBB<br>Polybrominated biphenyls | 1000 | N/A |
| 6.聚溴二苯醚 PBDE<br>Polybrominated diphenyl ethers | 1000 | N/A |
| 7.邻苯二甲酸二(2-乙基己基)酯<br>DEHP<br>Di (2-ethylhexyl) phthalate | 1000 | N/A |
| 8.邻苯二甲酸丁苄酯 BBP<br>Butyl Benzyl Phthalate | 1000 | N/A |
| 9.邻苯二甲酸二丁酯 DBP<br>Dibutyl Phthalate | 1000 | N/A |
| 10 邻苯二甲酸二异丁酯 DIBP<br>Diisobutyl Phthalate | 1000 | N/A |
| 11. 氟（F）、氯（Cl）、溴（Br）、碘（I）<br>Fluorine、Chlorine、 Bromine、 | 900、900、900、900<br>注：Br+Cl＜1000 | N/A |
| 12.包装材料中重金属(汞、镉、六价铬、铅、PBB、PBDE)之总量<br>Heavy metals (mercury, cadmium, lead, Cr+6,PBB and PBDE) in packing materials | N/A | 100<br>铅(Pb) + 镉(Cd) + 汞(Hg) + 六价铬(Cr+6) <100ppm |
| 13.高度关注物质<br>SVHC-Substances of Very High Concern | 1000 | N/A |


惠伦晶体
FAITH LONG CRYSTAL