广东惠伦晶体科技股份有限公司
GUANGDONG FAILONG CRYSTAL TECHNOLOGY Co.,Ltd.
36 Donghuan Road,Jitigang Village,Huangjiang,Dongguan,Guangdong Province,P.R.China
TEL :+86(0)769-38879888 Fax :+86(0)769-38879889 E-mail : yl@dgylec.com

PRODUCT SPECIFICATION SHEET

CUSTOMER	:	
PRODUCT TYPE	:	SMD X'TAL 1.6*1.2(4PAD)
NOMINAL FREQ.	:	26.000000 MHz
FL P/N	:	1S26000061
REVISION	:	A2
CUSTOMER P/N	:	

CUSTOMER'S APPROVAL&DATE

FL CORPORATION

APPROVED	CHECKED	DESIGNED
Jay Lee	Jin Qi	Chen XuanRu

RoHS Compliant

CONTENTS **PAGE**

- SPECIFICATION REVISION RECORD SHEET 2
- ELECTRICAL SPECIFICATIONS 3
- DIMENSIONS & MARKING 4
- STRUCTURE ILLUSTRATION 5
- RELIABILITY TEST SPECIFICATIONS 6
- PACKAGING REQUIREMENT 7/8
- SPECIFICATION OF THE ENVIRONMENT-RELATED SUBSTANCES 9

ATTACHMENT（optional）

- ELECTRICAL CHARACTERISTICS TEST A ☐ YES ☑ NO
- TEMPERATURE CHARACTERISTICS TEST B ☐ YES ☑ NO

SPECIFICATION REVISION RECORD SHEET

Rev.	Revise page	Revise Contents	Date	Ref. No.	Reviser
A0	N/A	Initial released	17-May-19	N/A	Chen XuanRu
A1	P3	Change ESR，DL，TS	26-Jun-19	N/A	Chen XuanRu
A2	P.5、P.8、P.9	P.5 change Electrode；P.8 change Bar Code Label；P.9 change Specification of the environment-related substances	10-Oct-19	N/A	Chen XuanRu

PRODUCT DESCRIPION

Standard atmospheric conditions

Unless otherwise specified. The standard range of atmospheric conditions for making measurement and tests are as follow:

Ambient temperature : 25±2℃
Relative humidity : 40%~70%

If there is no doubt the results, measurement shall be made within the following limits:

Ambient temperature : 25±2℃
Relative humidity : 40%~70%

Measure equipment

Electrical characteristics measured by S&A250B or equivalent.

Crystal cutting type

The crystal is using AT CUT (thickness shear mode)

ELECTRICAL SPECIFICATIONS

No.	Items	Electrical Spec.					Remarks
		Symbol	Min	Typ	Max	Units	
1	Nominal Frequency	FL		26.000000		MHz	-
2	Oscillation Mode	-		Fundamental		-	-
3	Load Capacitance	CL		7.0		pF	-
4	Frequency Tolerance	-		±10		ppm	at 25±2℃
5	Frequency Stability	-		±16		ppm	at -30～+85℃ (reference 25℃)
6	Shunt Capacitance	C0	-	-	3	pF	
7	Aging (/1 year)	-		±3		ppm/year	at 25±2℃
8	Operating Temperature	-	-30		85	℃	-
9	Storage Temperature	-	-40		85	℃	-
10	Equivalent series resistance	ESR	-		80	ohms	-
11	Insulation Resistance	IR	500	-	-	M-ohms	at DC 100V
12	Drive Level	DL		100	300	uW	-
13	Pulling Sensitivity	TS	9.50			ppm/pf	-

DIMENSIONS unit:mm

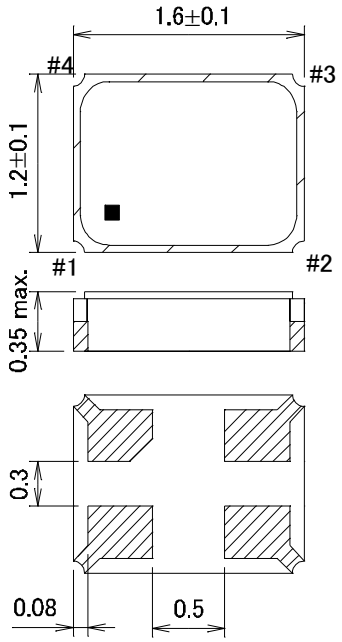

CONNECTION DIAGRAM (TOP VIEW)

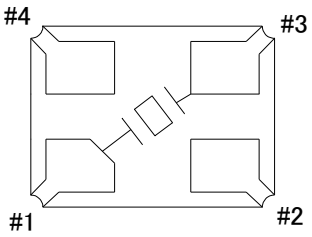

Pin	Function
#1	Xtal terminal (Input)
#2	GND terminal
#3	Xtal terminal (Output)
#4	N/C

LAND PATTERN unit:mm

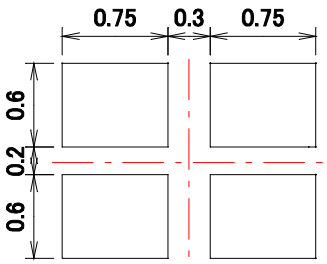

MARKING

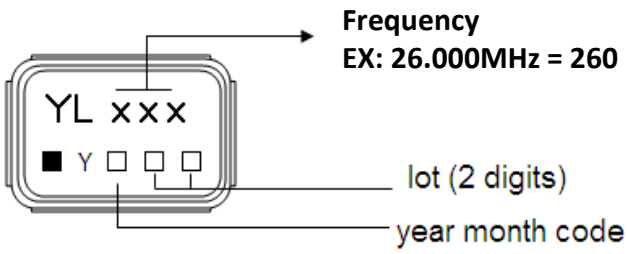

month / year		JAN	FEB	MAR	APR	MAY	JUN	JUL	AUG	SEP	OCT	NOV	DEC
2013	2017	A	B	C	D	E	F	G	H	J	K	L	M
2014	2018	N	P	Q	R	S	T	U	V	W	X	Y	Z
2015	2019	a	b	c	d	e	f	g	h	j	k	l	m
2016	2020	n	p	q	r	s	t	u	v	w	x	y	z

SUGGESTED REFLOW PROFILE

Total time : 360 sec. Max.

Solder melting point :225 °C

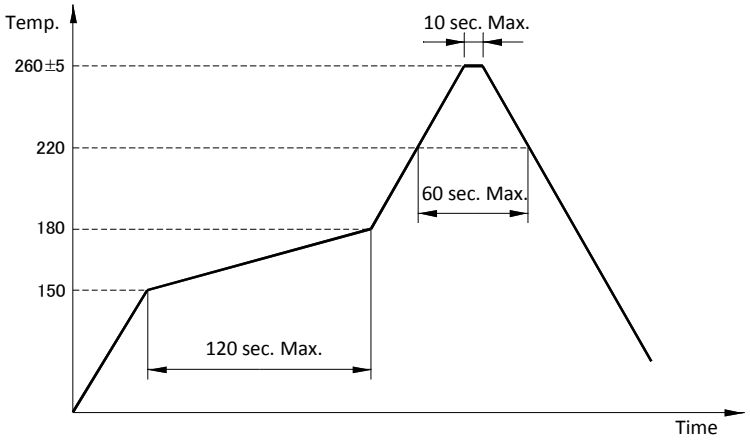

STRUCTURE ILLUSTRATION

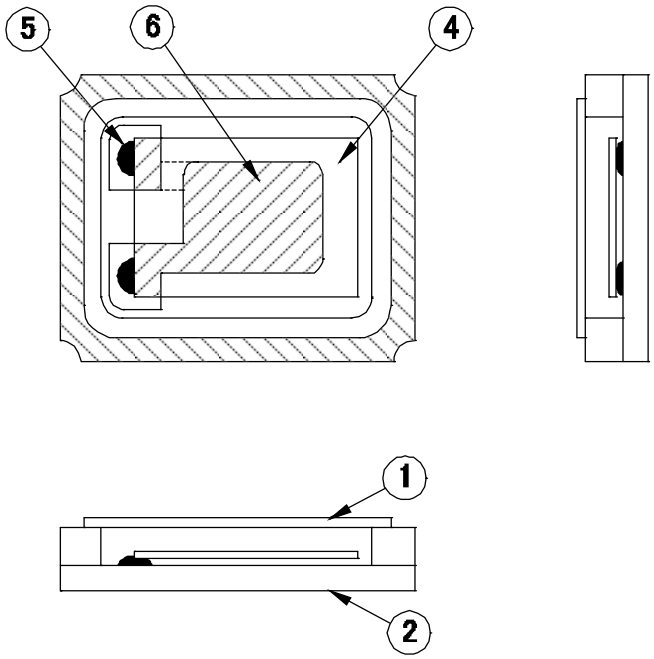

NO	COMPONENTS	MATERIALS	QTY	FINISH/SPECIFICATIONS
1	Cap(Lid)	Kovar(Fe+Co+Ni) + AuSn	1	-
2	Base(Package)	Alumina Ceramics (Al_2O_3)	1	
3	Pad(Package)	Ni + Au	4	Ni + Au plating
4	Crystal blank	SiO_2	1	-
5	Conductive adhesive	Ag	2	Silicone resin
6	Electrode	Noble metal	2	-

RELIABILITY SPECIFICATIONS

1.MECHANICAL ENDURANCE

No.	Test Item	Test Methods	
1	Drop Test	150 cm height, fall freely onto stainless plate 3 times.	JIS C6701
2	Shock Test	150g/150cm Height,3times in the direction of ±x, ±y, ±z on concrete floor	IEC-68-02-27
3	Mechanical Shock	Device are shocked to half sine wave (1000 G) three mutually pendicular axes each 3 times. 1.0m sec. duration time	MIL-STD-202F
4	Vibration	Frequency range 10 ~ 55 Hz Amplitude 1.52 mm Pendicular axes each test time 2 hours（x,y,z Axis） Total test time 6 hours	MIL-STD-883E
5	Gross Leak	Standard Sample For Automatic Gross Leak Detector Test Pressure 2kg/cm2	MIL-STD-883E
6	Fine Leak	Helium Bombing 4.5kgf/cm2 for 2 hr	MIL-STD-883E
7	Solderability	Temperature 215 °C +/- 5 °C Immersing depth 0.5 mm minimum Immersion time 10 +/- 0.5 seconds Flux Rosin resin methyl alcohol solvent (1 : 4)	MIL-STD-883E
8	Resistance To Soldering Heat	Pre-heat temperature 125 °C Pre-heat time 60 ~ 120 sec. Test temperature 260 +/- 5 °C Test time 5 +/- 1 sec.	MIL-STD-202F

2.ENVIRONMENTAL ENDURANCE

No.	Test Item	Test Methods	
9	High Temp. Storage	+ 125 °C +/- 3 °C for 500 +/- 12 hours	MIL-STD-883E
10	Low Temp. Storage	- 40 °C +/- 3 °C for 500 +/- 12 hours	
11	Thermal Shock	Total 100 cycles of the following temperature cycle 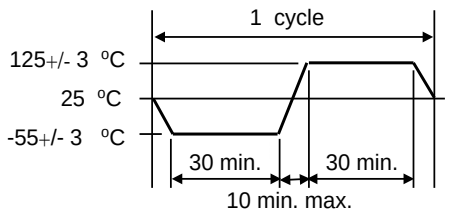	MIL-STD-883E
12	High Temp&Homidity	85℃±3℃, RH 85%,500Hrs	JIS C5023
13	Pressure Cooker Storage	120 +/- 3°C, RH100%, 2 bar, for 240 hours	JIS C6701

PACKING : (EIA-481-2)

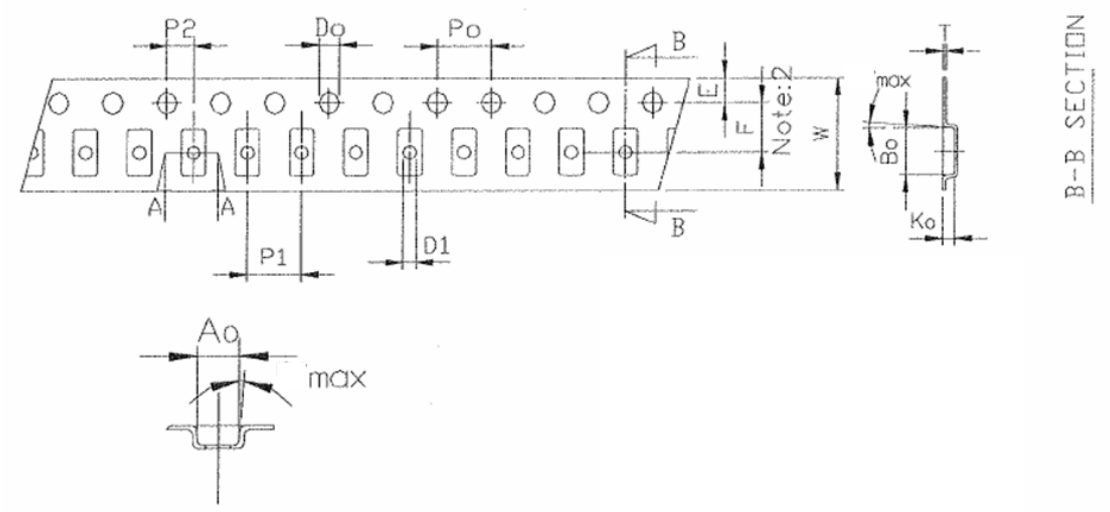

Dimension / PKG Type	Unit : mm						
	A0	**B0**	**K0**	**T**	**W**	**E**	**F**
1612(8mm)	1.45±0.1	1.85±0.1	0.45±0.10	0.25±0.05	8±0.3	1.75±0.1	3.50±0.1
	P1	**P2**	**D1**	**D0**	**P0**		
	4±0.1	2±0.1	0.6±0.1	1.55±0.05	4±0.1		

Standard Reel Quantity is 3,000 pcs per reel.

THE INSPECTION FOR TAPE TENSION

ITEM		Defect	Method
Appearance	ALL	1.The tape is not coincidence 2.The bubble	Visual inspection
Tape Tension	8045、7050 6035-12mm 5032-12mm 3225-12mm	overstep 61±6g(55~67g)	Pull test
	3225-8mm	overstep 40±5g(35~45g)	
	2520-8mm	overstep 55±6g(49~61g)	
	2016-8mm	overstep 34±6g(28~40g)	
	1612-8mm	overstep 34±6g(28~40g)	
	6035-16mm 5032-16mm	overstep 60±6g(54~66g)	

REMARK : NA

SMD PRODUCT PACKING STANDARD

Out-going packing instruction

Reel Packing	Inner Packing	Carton
name：reel standard：diameter 18cm material：plastics	name：inner box standard：L19.0xW19.0xH2.5cm material：B corrugated paper	name：carton standard：L34.0xW22.0xH22.0cm material：AB corrugated paper(10 boxes enter)



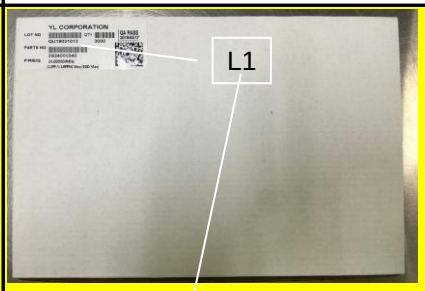





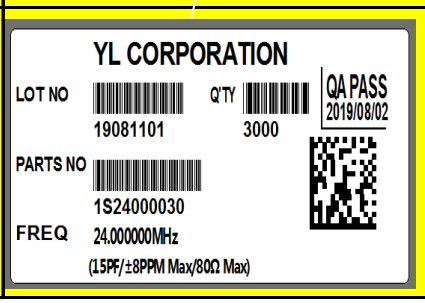



The label instruction

Label Drawing	Mark	Name of Article	Spec.	Size	Printing
YL CORPORATION LOT NO 19081101 Q'TY 3000 QA PASS 2019/08/02 PARTS NO 1S24000030 FREQ 24.000000MHz (15PF/±8PPM Max/80Ω Max)	L1	条码标签 Bar Code Label (Chintz Paper)	1.Date Code 2.Lot No. 3.Part No. 4.Freq 5.Q'ty	75x35mm	White

Remark

Specifications on the label is for the use of templates with different product specifications may vary.
If customer specified requirements for labels packaging. please provide the operation procedure.

Range	Products	Packing Material	Test Method
Banned Substances	**Maximum concentration ppm(mg/kg)**	**Maximum concentration ppm(mg/kg)**	
1.镉及镉化合物 Cadmium and cadmium compounds	5	5	ICP-AES as per EN1122, method B2001 or other acid digestion.
2.铅及铅化合物 Lead and lead compounds	40	100	ICP-AES after as per EPA 3050B or other acid digestion.
3.汞及汞化合物 Mercury and mercury compounds	5	5	ICP-AES after as per EPA 3052 or other acid digestion.
4.六价铬化合物 Hexavalent-Chromium VI (Cr+6)	10	10	As per US EPA 7196A and US EPA 3060A.
5.聚溴联苯 PBB Polybrominated biphenyls	5	5	With reference to USEPA 3540 or USEPA3550. Analysis was performed by LPLC/DAD, LC/MS or GC/MS. (prohibited by 2002/95/EC (RoHS),83/261/EEC, and76/769/EEC)
6.聚溴二苯醚 PBDE Polybrominated diphenyl ethers	5	5	With reference to USEPA3540or USEPA3550. Analysis was performed by HPLC/DAD LC/MS or GC/MS.(prohibited by 2002/95/EC(RoHS), 83/264/EEC, and 76/769/EEC)
7.邻苯二甲酸二(2-乙基己基)酯 DEHP Di (2-ethylhexyl) phthalate	40	100	ICP-OES, UV-Vis and GC-MS were used for analysis, with reference to IEC 62321-4:2013+A1:2017，IEC 62321-5:2013，IEC 62321-7-1:2015，IEC 62321-6:2015
8.邻苯二甲酸丁苄酯 BBP Butyl Benzyl Phthalate	40	100	ICP-OES, UV-Vis and GC-MS were used for analysis, with reference to IEC 62321-4:2013+A1:2017，IEC 62321-5:2013，IEC 62321-7-1:2015，IEC 62321-6:2015
9.邻苯二甲酸二丁酯 DBP Dibutyl Phthalate	40	100	ICP-OES, UV-Vis and GC-MS were used for analysis, with reference to IEC 62321-4:2013+A1:2017，IEC 62321-5:2013，IEC 62321-7-1:2015，IEC 62321-6:2015
10 邻苯二甲酸二异丁酯 DIBP Diisobutyl Phthalate	40	100	ICP-OES, UV-Vis and GC-MS were used for analysis, with reference to IEC 62321-4:2013+A1:2017，IEC 62321-5:2013，IEC 62321-7-1:2015，IEC 62321-6:2015
11.聚氯乙烯(PVC)以及聚氯乙烯混合物 Polyvinyl chloride (PVC) and PVC blends	No detect	No detect	
12.包装材料中重金属(汞、镉、六价铬、铅、PBB、PBDE)之总量 Heavy metals (mercury, cadmium, lead, Cr+6,PBB and PBDE) in packing	N/A	<100	
13.高度关注物质 SVHC-Substances of Very High Concern	<1000	<1000	

Lead Free Products are “Directive 2002/95/EC of The European Parliament of 27 January 2003 on the restriction of certain hazardous substances (RoHS) in electrical and electronic equipment” and Sony SS-00259 Compliant.


惠伦晶体
FAILONG CRYSTAL