Product Specification
TCXO

Model	6TG3840002
Size	2016
Frequency	38.400000MHz
Type	TCXO
Vcc	+1.7V ~ +3.3V
Vcont	N/A
AFC Range	N/A
Temp.	±0.5ppm max.@-40 ~ +85℃
Slope	±0.1ppm/℃ max.@-40 ~ +85℃
Initial Frequency	±2.0ppm max.(After 2times reflow)

Issued Date	2019.06.06
Revised Date	
Prepared part	R&D
Drawn	Kuro Peng
Checked	
Approved	

1. Electrical Characteristics

Parameter		Value	Conditions
Frequency		38.400000MHz	
Supply Voltage(Vcc)		+1.8V±5%	
		+2.8V±5%	
		+3.0V±5%	
Output Load		10kohm//10pF±10%	
Control Voltage(Vcont)		N/A	
Voltage Control Range		N/A	
Output Level		0.8Vp-p min.	Clipped sine wave(DC-coupled)
Current		2.0mA max.	10koms//10pF±10%
Duty Cycle		50±10%	
Operating Temperature Range		-40~+85˚C	
Storage Temperature Range		-40~+85˚C	
Initial Frequency Tolerance		±2.0ppm max.	After 2times reflow*
Frequency Stability	vs. Temperature(-40 ~ +85˚C)	±0.5ppm max.	Referenced to +25˚C frequency
	vs. Supply Voltage	±0.1ppm max.	Vcc±5%
	vs. Load	±0.1ppm max.	10koms//10pF±10% each
	vs. Aging	±1.0ppm max.	1st Year
Frequency Slope	vs. Temperature(-40 ~ +85˚C)	±0.1ppm/˚C max.	Every +2˚C
Startup Time		2ms max.	more than 90% of final amplitude
Harmonics		-8dBc max.	
Phase Noise		--90dBc/Hz typ.	10Hz offset
		-115dBc/Hz typ.	100Hz offset
		-135dBc/Hz typ.	1KHz offset
		-146dBc/Hz typ.	10KHz offset
		-147dBc/Hz typ.	100KHz offset

*Notes:

- Please leave after reflow in 2h or more at room ambient

2. Outline Specification

Unit： mm

Top View

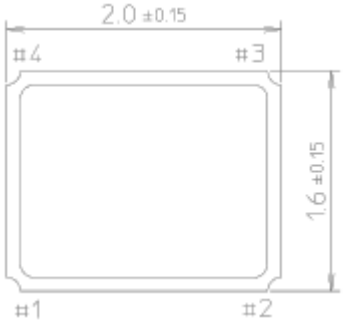

Crystal Top View



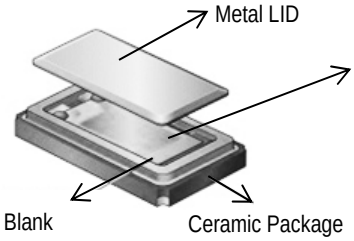

Bottom View

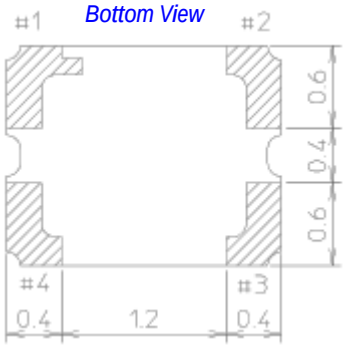

Side View



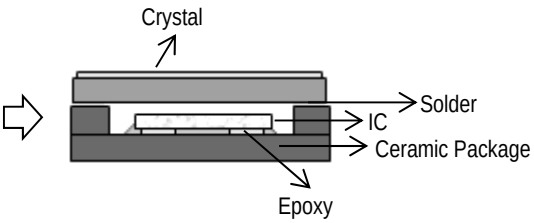

Recommended Land Pattern

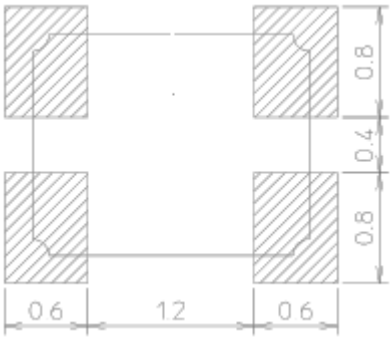

Pad No.	Connection	
	TCXO	VC-TCXO
#1	GND	Vcont
#2	GND	GND
#3	Output	Output
#4	Vcc	Vcc

Measurement Circuit

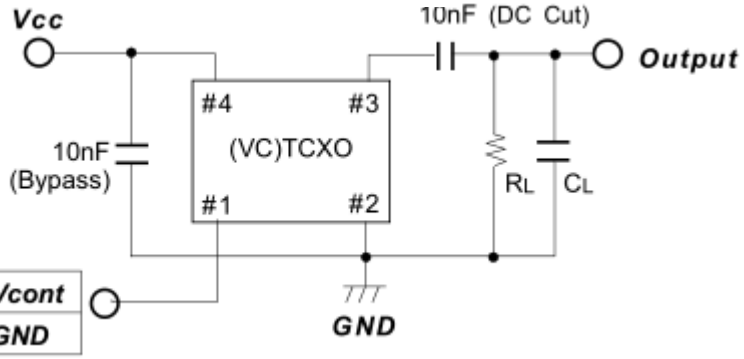

VC-TCXO	Vcont
TCXO	GND

Notes：

- Please connect a bypass capacitor closely to Vcc Pad.
- Load capacitance (CL) includes probe and test board capacitance.

3. Marking Specification

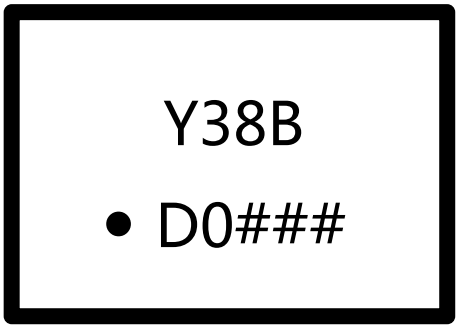

●Mark-1： Y(①) 38B(②~④)

●Mark-2： ●(①) D0(②~③) ###(④~⑥)

Mark-1		
Digit order	Symbol	Explanation
1	Y	YL(YouLian)
2~4	38B	Frequency
Mark-2		
Digit order	Symbol	Explanation
1	●	Index
2~3	D0	Serial Number(A0~Z9)
4~6	###	Production Year + Month + Day

Frequency:38B					
Symbol	Frequency [MHz]	Symbol	Frequency [MHz]	Symbol	Frequency [MHz]
16B	16.367667	13A	13.000000	40A	40.000000
16C	16.367000	19B	19.200000	38B	38.400000
16D	16.367600	26A	26.000000		
16E	16.368000	32A	32.000000		
16F	16.369000	32B	32.768000		

4. Packing Specifications

Basic Taping Specification

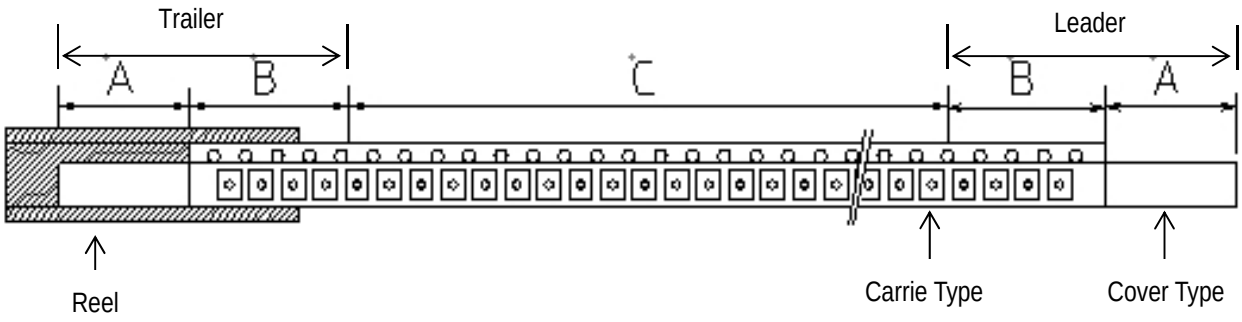

A	Cover tape only	200mm min.
B	Empty carrier tape	300mm min.
C	Component Section	

Notes:

- Insert TCXO product in carrier tape
- Attach cover tape using heat pressing method

Carrier Tape (8mm)

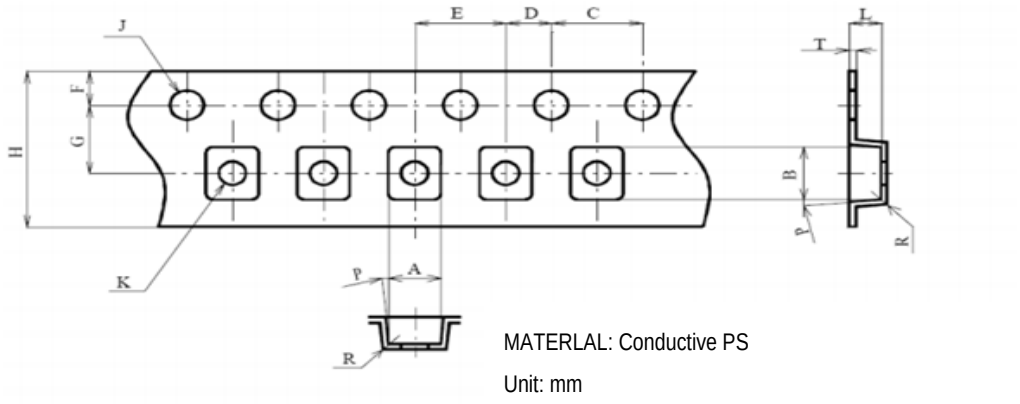

MATERLAL: Conductive PS

Unit: mm

Symbol	A	B	C	D	E	F	G
Dimension	2.3±0.1	2.7±0.1	4.0±0.1	2.0±0.05	4.0±0.1	1.75±0.1	3.5±0.05
Symbol	H	J	K	L	P	T	R
Dimension	8.0±0.2	Φ1.5+0.1/-0	Φ1.2±0.1	1.4±0.1	5° max.	0.3±0.05	R0.3 max.

Reel Taping

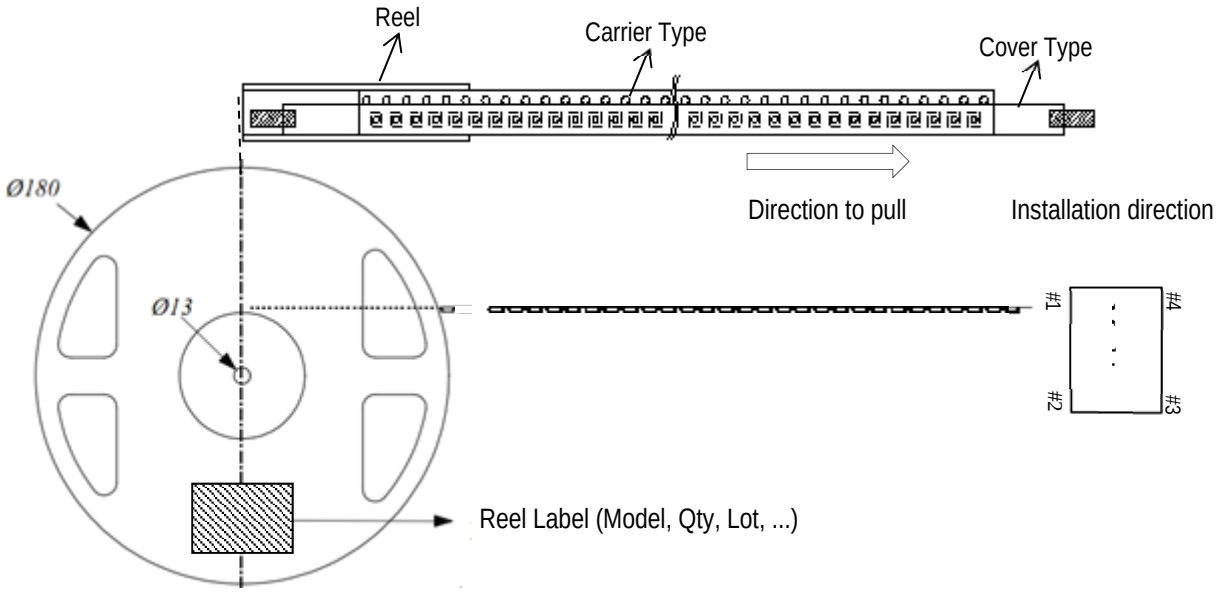

Inner Bag / Inner Box / Outer Box

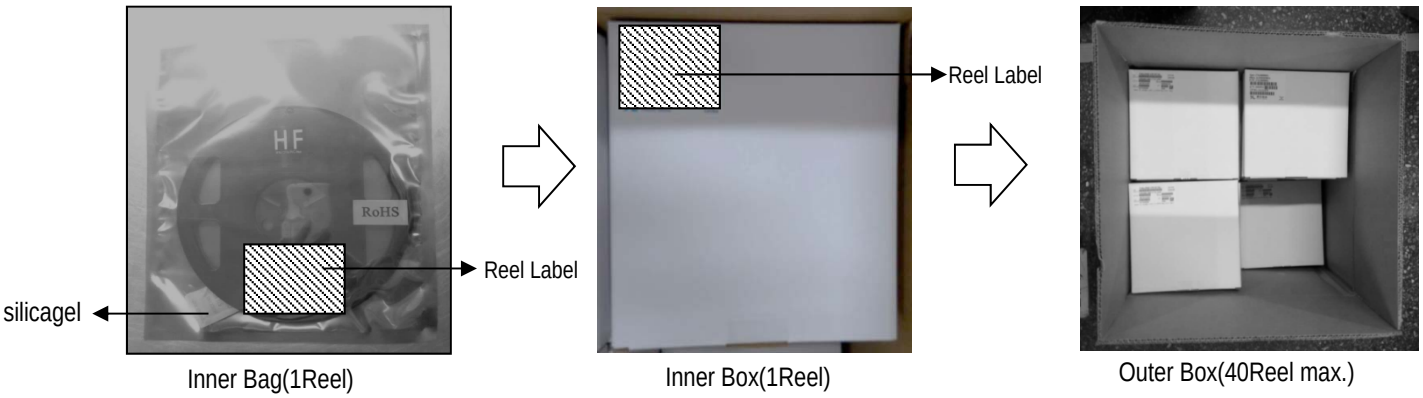

Reel	Inner Bag	Inner Box	Outer Box
3,000pcs	3,000pcs	3,000pcs	120,000pcs max.

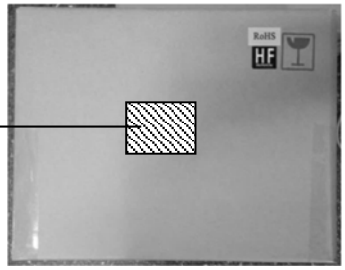

5. Reliability Specifications

	Test Item	Test Condition	Criteria
1	Preconditioning	125'C 24Hr → 85'C,85%RH 168Hr → 3times reflow It shall be measured after 4Hr to 12Hr at room temperature & humidity	±1.0ppm
2	Drop	Preparation: Test pieces should be fixed on the dummy load with 120~150g weights Condition: Height 150cm onto Iron-plate Drop times: 3 times in 6 mutually perpendicular axes, 1 time random drop total 19 times Condition: Height 120cm onto Iron-plate Drop times: 2 times in 6mutually perpendicular axes Total drop times: 31 times	±1.0ppm
3	High Temp. & Humidity Storage	85'C,85%RH 240Hr It shall be measured after 4Hr to 12Hr at room temperature & humidity	±1.0ppm
4	Thermal shock	-40'C/30min ↔ 85'C/30min, 100cycles It shall be measured after 4Hr to 12Hr at room temperature & humidity	±1.0ppm
5	Vibration	20~2000Hz, PSD 0.053g2/Hz, X.Y.Z direction,15min/direction	±1.0ppm
6	High Temp. Storage	125'C, 240Hr	±1.0ppm
7	Low Temp. Storage	-55'C, 240Hr	±1.0ppm
8	PCT(Pressure Cooker Test)	121'C, 100%RH, 96Hr It shall be measured after 2Hr to 48Hr at room temperature & humidity	±1.0ppm
9	Solderability	Precondition: 105'C, 100%RH, 4Hr Condition:235±5'C for 3±0.5sec, Solder Pot	90%
10	Solder Heat Resistance	260±5'C, 10±1sec, Solder Pot It shall be measured after 2Hr to 4Hr at room temperature & humidity	±1.0ppm
11	ESD(Electrostatic Discharge) Human Body Model	C = 100pF, V = ±1KV, R = 1.5kohm, 3times	±1.0ppm

6. Recommended Reflow Profile

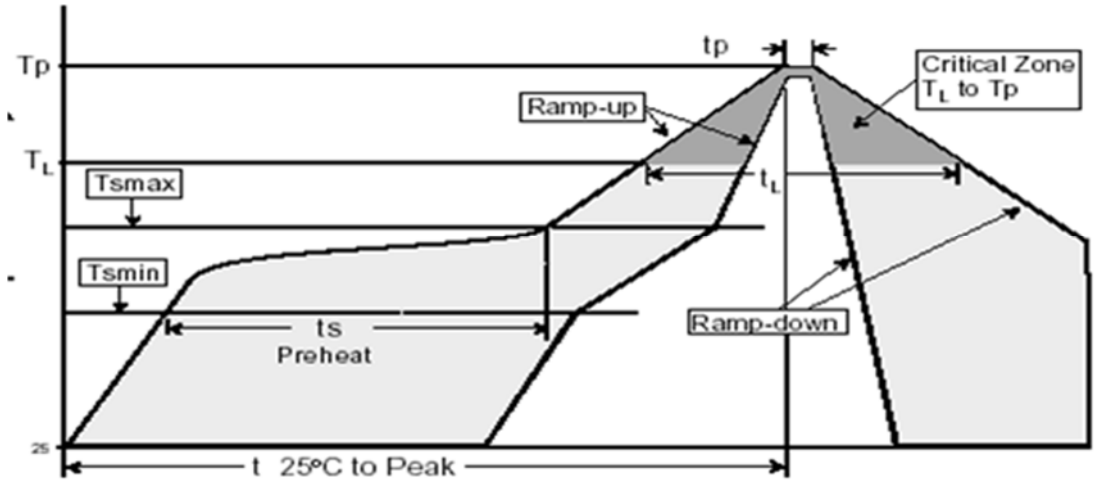

1	Preheat -Temp. Min (Tsmin) -Temp. Max (Tsmax) -Time (ts)	 150'C 200'C 60~180sec
2	Primary Heat -Temp. (TL) -Time (tL)	 220'C 60~150sec
3	Peak -Temp. (Tp) -Time (tp)	 260'C 10sec max.