PRODUCT SPECIFICATION SHEET



Customer	–		
Customer P/N	TBA		
Product Type	Temperature Compensated Crystal Oscillator		
Part Number	2TN4000005	Version	S0
Part Description	SMD TCXO 2.5 x 2.0		
Nominal Frequency	40.000000MHz		

Prepared	Li Xiang
Reviewed	Jin Zhe
Approved	Xing Yue
Date	2023/4/3

Customer's Approval & Date：

廣東惠倫晶體科技股份有限公司
中国广东省东莞市黄江镇东环路鸡啼岗段68号
68 Donghuan Road, Jitigang Village, Huangjiang,
Dongguan, Guangdong Province, P. R. China
WEB : http://www.dgylec.com/
TEL : +86 (0) 769 - 38879888
FAX : +86 (0) 769 - 38879889
EMAIL : yl@dgylec.com

RoHS COMPLIANT

Pb Lead-Free

Moisture Sensitivity Level 1

CONTENTS

#	Item	Page
1	History of Specification Revision	3
2	Electrical Specifications	4
	2.1 Operation conditions	4
	2.2 Output characteristics	4
	2.3 Frequency characteristics	4
	2.4 Phase noise characteristics	4
3	Product Design	5
	3.1 Package dimensions and pad functions	5
	3.2 Recommended land pattern	5
	3.3 Recommended reflow profile	5
4	Testing Circuit	6

* Attention

If you intend to use products on the controlling equipment that relate to medical, aeronautical, aerospace, military science, space and etc, please make sure to let us know your intentions in advance.

Ultrasonic related process may cause damage to crystal blank by resonance itself. If ultrasonic related process is used, we strongly recommend to assess the damage risk under related ultrasonic conditions before use in production.

1. History of Specification Revision

Ver.	Contents	Date	Reviser	Remark
S0	Initial release	2023/4/3	Li Xiang	

2. Electrical Specifications

2.1 Operation conditions

#	Parameters	Min.	Typ.	Max.	Unit	Remark
1	Nominal frequency		40.000000		MHz	-
2	Supply voltage (Vcc)	1.68	-	3.63	V	-
3	ESD		HBM＞2000V		-	JESD22-A114-B
4	MSL		Level 1		-	IPC/JEDEC J-STD-033C
5	Current consumption	-	-	2.0	mA	-
6	Operating temperature range	-40	-	+85	℃	-
7	Storage temperature range	-40	-	+90	℃	-

2.2 Output characteristics

#	Parameters	Min.	Typ.	Max.	Unit	Remark
1	Output type		Clipped sine wave		-	Decoupling capacitor is required in external circuit
2	Standard output Load		10 KΩ//10 pF		-	-
3	Output level	0.8	-	-	V_{pp}	-
4	Duty cycle	45	50	55	%	Ground level
5	Harmonics	-	-	-5	dBc	-
6	Start-up time vs. frequency	-	-	2.0	ms	Within ±0.5 ppm
7	Start-up time vs. output level	-	-	2.0	ms	≥90% of Vpp

2.3 Frequency characteristics

#	Parameters	Min.	Typ.	Max.	Unit	Remark
1	Nominal frequency		40.000000		MHz	-
2	Frequency tolerance after reflow	-2.0	-	+2.0	ppm	At 25±2℃ after 2 times reflow, refer to nominal frequency
3	Frequency stability vs. temperature	-1.5	-	+1.5	ppm	Within -40 to +85°C, refer to frequency at 25°C
4	Frequency stability vs. supply voltage	-0.2	-	+0.2	ppm	±5% Vcc variation
5	Frequency stability vs. load variation	-0.2	-	+0.2	ppm	±10% load variation
6	Frequency Aging	-1.0	-	+1.0	ppm/First year	-

2.4 Phase noise characteristics

#	Parameters	Min.	Typ.	Max.	Unit	Remark
1	Phase noise at 1kHz offset	-	-130	-	dBc/Hz	-

3. Product Design

3.1 Package dimensions and pad functions

Top View

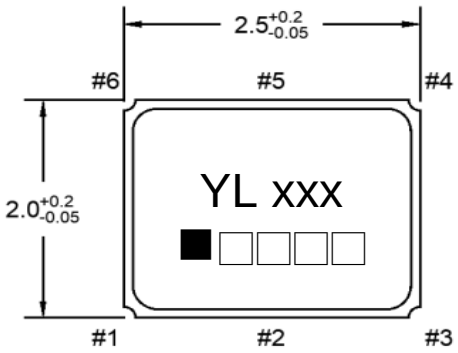

Bottom View

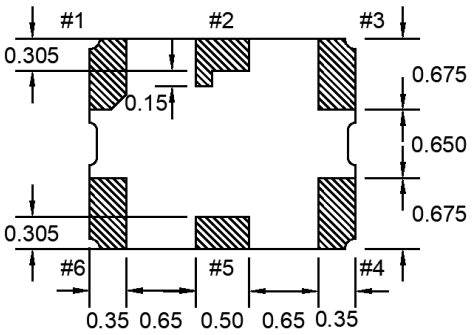

Side View

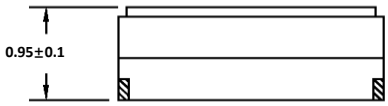

Pad	Function	Symbol
1	Ground	GND
2	N.C	N.C
3	Ground	GND
4	Output	OUT
5	N.C	N.C
6	Supply voltage	Vcc

3.2 Recommended land pattern

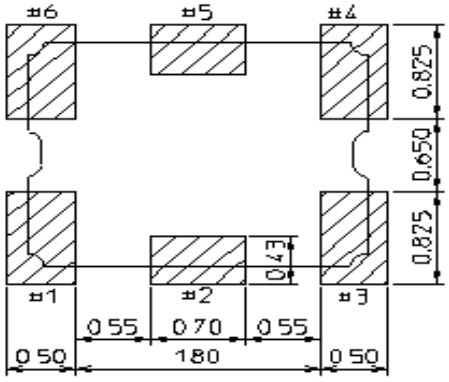

Unit : mm

3.3 Recommended reflow profile

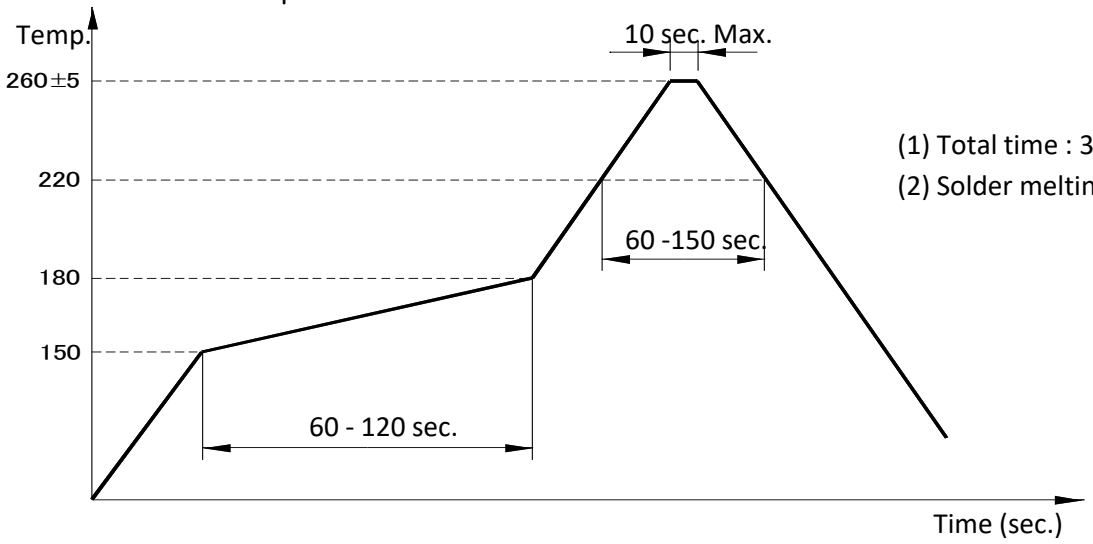

(1) Total time : 360 sec. Max.
(2) Solder melting point : 225℃

4. Testing Circuit

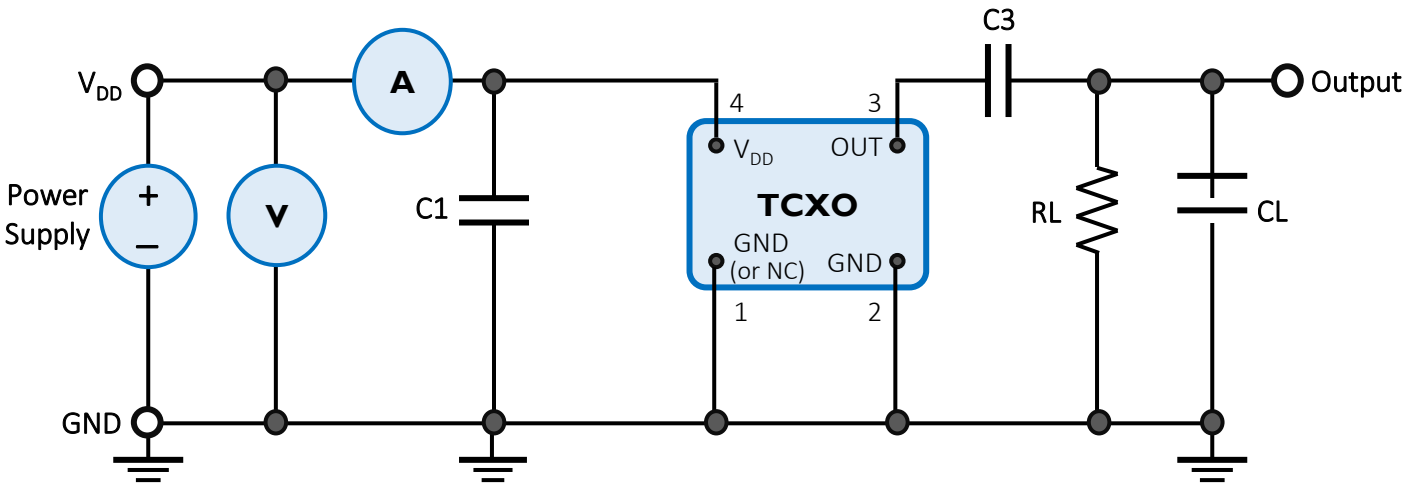

External Components:

Parts	Function	Recommended
C1	AC noise bypass for V_{DD}	10nF
C3	DC block for output	10nF
RL	Load resistance	10KΩ
CL	Load capacitance	10pF