PRODUCT SPECIFICATION SHEET



Customer	–		
Customer P/N	TBA		
Product Type	Temperature Compensated Crystal Oscillator		
Part Number	9T36000001	Version	S0
Part Description	SMD TCXO 2.0 x 1.6		
Nominal Frequency	36.000000MHz		

Prepared	Li Xiang
Reviewed	Jin Zhe
Approved	Xing Yue
Date	2022-7-22

Customer's Approval & Date：

廣東惠倫晶體科技股份有限公司
中国广东省东莞市黄江镇东环路鸡啼岗段68号
68 Donghuan Road, Jitigang Village, Huangjiang,
Dongguan, Guangdong Province, P. R. China
WEB : http://www.dgylec.com/
TEL : +86 (0) 769 - 38879888
FAX : +86 (0) 769 - 38879889
EMAIL : yl@dgylec.com

RoHS COMPLIANT

Pb Lead-Free

Moisture Sensitivity Level 1

CONTENTS

#	Item	Page
1	History of Specification Revision	3
2	Electrical Specifications	4
	2.1 Operation conditions	4
	2.2 Output characteristics	4
	2.3 Frequency characteristics	4
	2.4 Phase noise characteristics	4
3	Product Design	5
	3.1 Package dimensions and pad functions	5
	3.2 Recommended land pattern	5
	3.3 Recommended reflow profile	5
4	Testing Circuit	6

1. History of Specification Revision

Ver.	Contents	Date	Reviser	Remark
S0	Initial release	2022-7-22	Li Xiang	

2. Electrical Specifications

2.1 Operation conditions

#	Parameters	Min.	Typ.	Max.	Unit	Remark
1	Nominal frequency		36.000000		MHz	
2	Supply voltage (V_{DD})	1.68	-	3.63	V	
3	Current consumption	-	-	2.0	mA	
4	Operating temperature range	-40	-	+105	°C	
5	Storage temperature range	-40	-	+105	°C	

2.2 Output characteristics

#	Parameters	Min.	Typ.	Max.	Unit	Remark
1	Output type		Clipped sine wave		-	Decoupling capacitor is required in external circuit
2	Standard output Load		10 KΩ//10 pF		-	
3	Output level	0.8	-	-	V_{pp}	
4	Duty cycle	40	50	60	%	Ground level
5	Harmonics	-	-	-5	dBc	
6	Start-up time vs. frequency	-	-	2.0	ms	Within ±0.5 ppm
7	Start-up time vs. output level	-	-	2.0	ms	≥90% of Vpp

2.3 Frequency characteristics

#	Parameters	Min.	Typ.	Max.	Unit	Remark
1	Nominal frequency		36.000000		MHz	
2	Frequency tolerance after reflow	-1.0	-	+1.0	ppm	At 25±2℃ after 2 times reflow, refer to nominal frequency
3	Frequency stability vs. temperatur 1	-2.5	-	+2.5	ppm	Within -40 to -+85°C, refer to frequency at 25°C
3	Frequency stability vs. temperature 2	-10	-	+10	ppm	Within +85 to +105°C, refer to frequency at 25°C
4	Initial Frequency Calibration	-1.0	-	+1.0	ppm	
5	Frequency stability vs. supply voltage	-0.2	-	+0.2	ppm	±5% V_{DD} variation
6	Frequency stability vs. load variation	-0.2	-	+0.2	ppm	±10% load variation
7	Aging over 1st year	-1.0	-	+1.0	ppm/yr	At room temperature
8	ESD		HBM＞2000V		-	JESD22-A114-B
9	MSL		Level 1		-	IPC/JEDEC J-STD-033C

2.4 Phase noise characteristics

#	Parameters	Min.	Typ.	Max.	Unit	Remark
1	Phase noise at 1kHz offset	-	-130	-	dBc/Hz	

3. Product Design

3.1 Package dimensions and pad functions

Top view

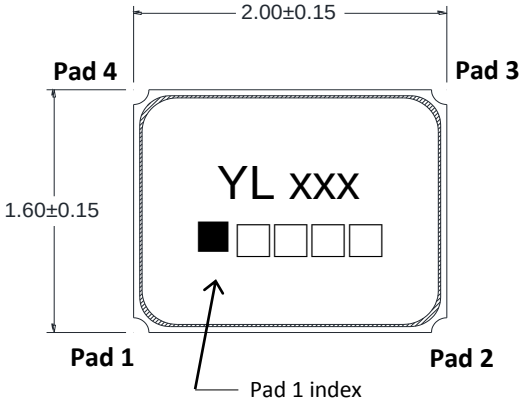

Unit : mm

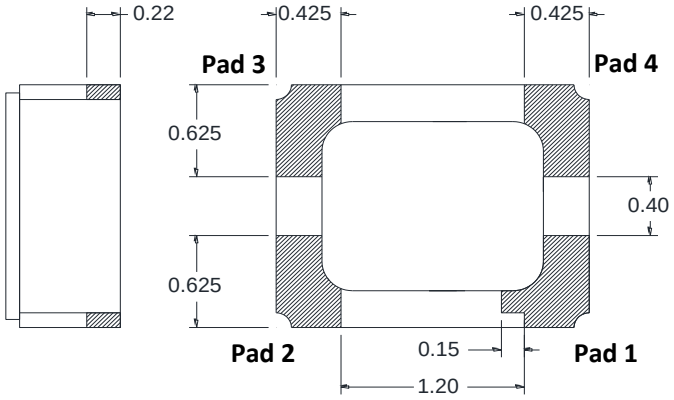

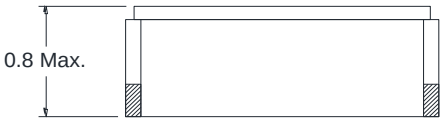

Lateral view

Pad	Function	Symbol
1	NC or GND (Ground recommended)	NC
2	Ground	GND
3	Output	OUT
4	Supply voltage	V_{DD}

3.2 Recommended land pattern

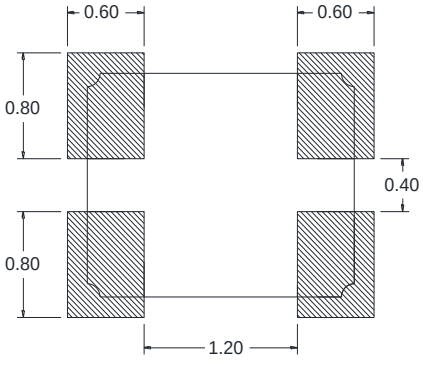

Unit : mm

3.3 Recommended reflow profile

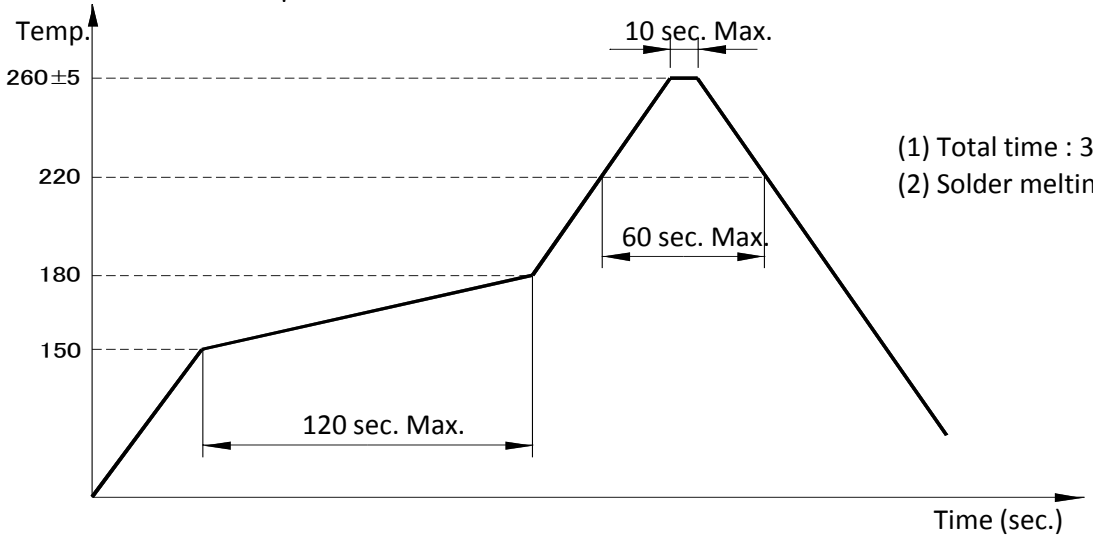

(1) Total time : 360 sec. Max.
(2) Solder melting point : 225℃

4. Testing Circuit

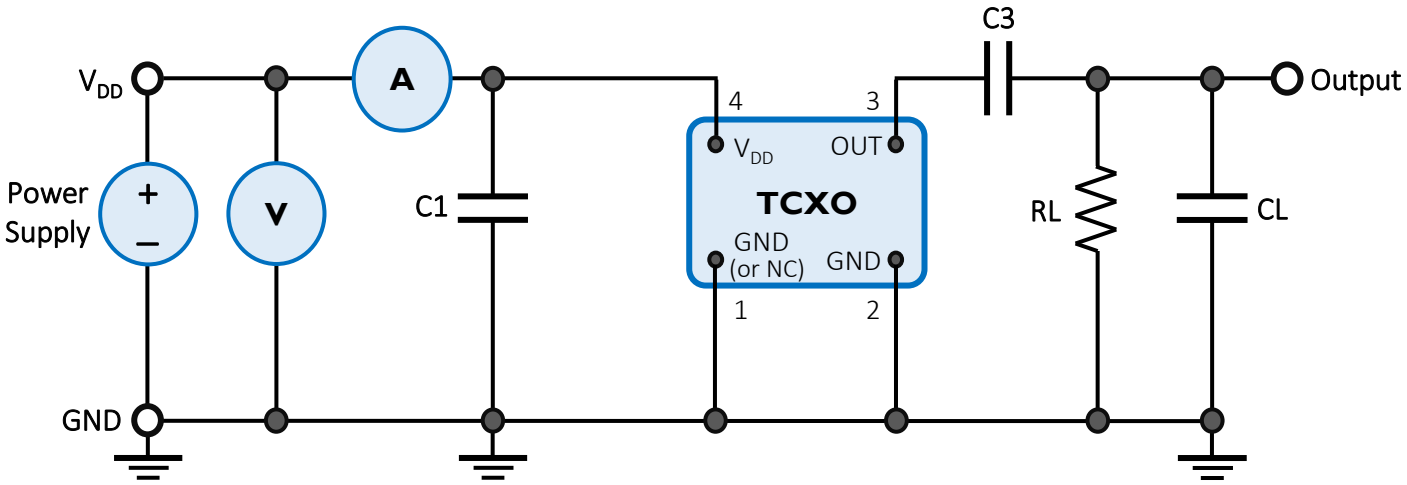

External Components:

Parts	Function	Recommended
C1	AC noise bypass for V_{DD}	10nF
C3	DC block for output	10nF
RL	Load resistance	10KΩ
CL	Load capacitance	10pF