广东惠伦晶体科技股份有限公司
GUANGDONG FAITH LONG CRYSTAL TECHNOLOGY Co.,Ltd.
NO.68 Huangjiang Donghuan Road，Huangjiang Town，Dongguan City，Guangdong Province，China
TEL :+86(0)769-38879888 Fax :+86(0)769-38879889 E-mail : yl@dgylec.com

PRODUCT SPECIFICATION SHEET

CUSTOMER	:	
PRODUCT TYPE	:	OSC 3.2X2.5 (4PAD)
NOMINAL FREQ.	:	32.768000 KHz
FL P/N	:	3LQ3200002
REVISION	:	S0
CUSTOMER P/N	:	

CUSTOMER'S APPROVAL&DATE

FL CORPORATION

APPROVED	CHECKED	DESIGNED
Xing Yue	Huang Ji Ning	Li Xiang

MSL1

RoHS Compliant

AEC-Q100 Certified

CONTENTS **PAGE**

- SPECIFICATION REVISION RECORD SHEET 2
- ELECTRICAL SPECIFICATIONS 3
- DIMENSIONS & MARKING 4
- STRUCTURE ILLUSTRATION 5
- RELIABILITY TEST SPECIFICATIONS 6/7
- PACKAGING REQUIREMENT 8/9
- SPECIFICATION OF THE ENVIRONMENT-RELATED SUBSTANCES 10

ATTACHMENT（optional）

- ELECTRICAL CHARACTERISTICS TEST A ☐ YES ☑ NO
- TEMPERATURE CHARACTERISTICS TEST B ☐ YES ☑ NO

Attention

- If you intend to use products on the controlling equipment that relate to medical, aeronautical, aerospace, military science, space and etc, please make sure to let us know your intentions in advance.
- Ultrasonic related process may cause damage to crystal blank by resonance itself.
  If ultrasonic related process is used, we strongly recommend to assess the damage risk under related ultrasonic conditions before use in production.

SPECIFICATION REVISION RECORD SHEET

Rev.	Revise page	Revise Contents	Date	Ref. No.	Reviser
S0	N/A	Initial released	17-Apr-23	N/A	Li Xiang

ELECTRICAL SPECIFICATIONS

Standard atmospheric conditions

Unless otherwise specified. The standard range of atmospheric conditions for making measurement and tests are as follow:

Ambient temperature 25±2℃
Relative humidity 40%~70%

If there is no doubt the results, measurement shall be made within the following limits:

Ambient temperature 25±2℃
Relative humidity 40%~70%

Measure equipment

Electrical characteristics measured by S&A 280B or equivalent.

Crystal cutting type

The crystal is using AT CUT (thickness shear mode)

ELECTRICAL SPECIFICATIONS

Parameters	Symbol	Electrical Spec.	UNITS	Notes
Nominal Frequency	FL	32.768000	KHz	-
Operating Temperature	TOPR	-40 ~ +105	℃	-
The Total Frequency Offset	-	±100	ppm	-
Output Load	CL	15.0	p F	Max.
Supply Voltage	VDD	1.8~3.3	V	-
“0”Level	VOL	VDD×0.1	V	Max.
“1”Level	VOH	VDD×0.9	V	Min.
Enable High Voltage	ELH	VDD×0.7	V	Min.
Enable Low Voltage	ELL	VDD×0.3	V	Max.
Symmetry of Wave From	Symmetry	45~55%		-
Current Consumption	IDD	10.0	m A	Max.
Rise and Fall Time	Tr,Tf	45.0	nSec	Max.
Start time	tosc	10.0	mSec	Max.
Aging	-	±5	ppm	1st Year
Storage Temperature Range	-	-55 ~ +125	℃	-
ESD	-	HBM＞2000V	–	JESD22-A114-B
MSL	-	Level 1	–	IPC/JEDEC J-STD-033C
Output waveform	-	CMOS	-	-

DIMENSIONS

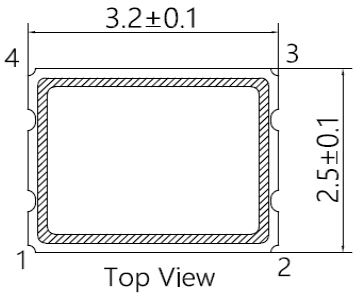

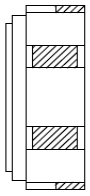

PAD FUNCTION
1: ENABLE CONTROL
2: GND
3: OUT
4: VDD



Enable Control

Pad 1 Input	Pad 3 Output
Level High or Open	Normal Operation
Level Low	Stopped

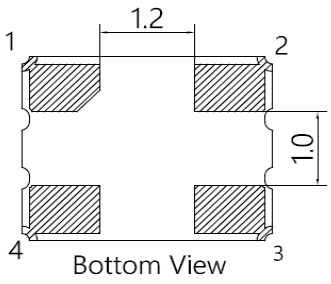

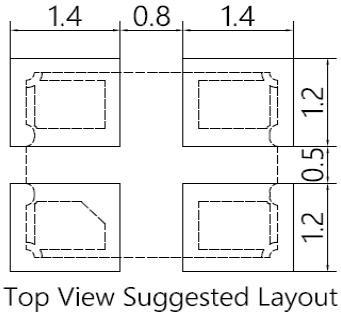

MARKING

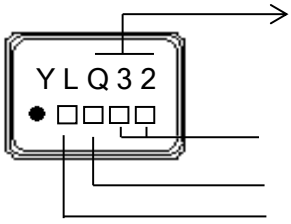

Frequency
Ex：Q32=32.768KHz

Lot （2 digits）
Year Month Code
Administrative Symbol

year \ month	JAN	FEB	MAR	APR	MAY	JUN	JUL	AUG	SEP	OCT	NOV	DEC
2021	2025	A	B	C	D	E	F	G	H	J	K	L	M
2022	2026	N	P	Q	R	S	T	U	V	W	X	Y	Z
2023	2027	a	b	c	d	e	f	g	h	j	k	l	m
2024	2028	n	p	q	r	s	t	u	v	w	x	y	z

SUGGESTED REFLOW PROFILE

Total time : 360 sec. Max.
Solder melting point :225 ^{o}C

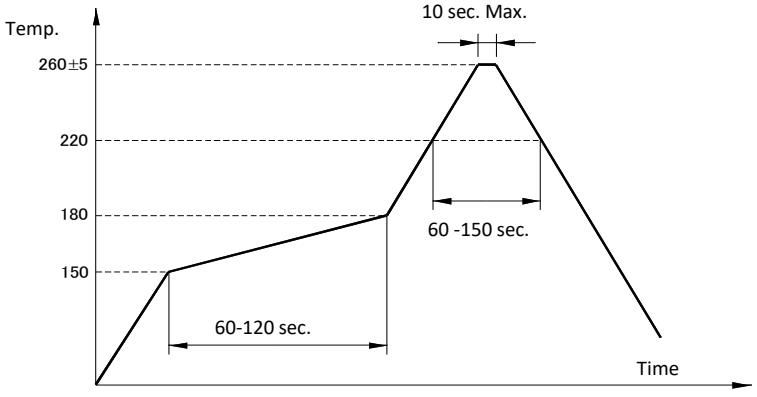

STRUCTURE ILLUSTRATION

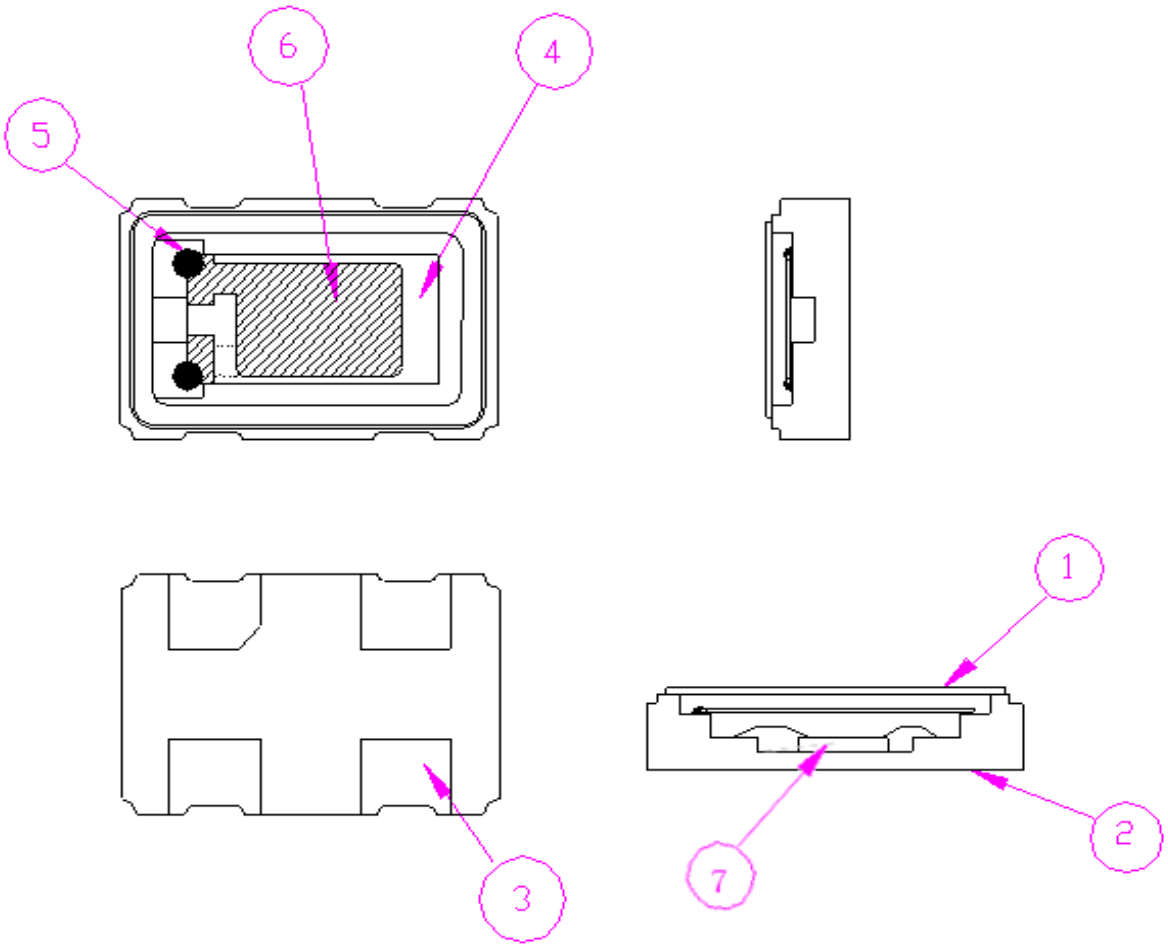

NO	COMPONENTS	MATERIALS	QTY	FINISH/SPECIFICATIONS
1	Cap (Lid)	Metal (Fe)	1	-
2	Base (Package)	Ceramic (Al_2O_3)	1	Alumina ceramics
3	Pad (Package)	Au	4	Tungsten metalize +Ni plating +Au plating
4	Crystal blank	SiO_2	1	-
5	Conductive adhesive	Ag	4	Silicone resin
6	Electrode	Noble metal	2	-
7	IC	Silicon (Si)	1	-

RELIABILITY SPECIFICATIONS

Based on AEC-Q100 Rev. H

No.	Item	Stress and Test Condition	Reference
1	Preconditioning	MSL1, bake 125°C 24 hours, 85°C/85% RH 168 hours, reflow x3 times.	JEDEC J-STD-020, JESD22-A113
2	Temperature-Humidity-Bias or Biased HAST	Preconditioning before stress. THB (85°C/85%RH for 1000 hours) or HAST (130°C/85%RH for 96 hours, or 110°C/85%RH for 264 hours).	JEDEC JESD22-A101 or A110
3	Autoclave or Unbiased HAST or Temperature-Humidity (without Bias)	Preconditioning before stress. AC (121°C/15psig for 96 hours) or unbiased HAST (130°C/85%RH for 96 hours, or 110°C/85%RH for 264 hours).	JEDEC JESD22-A102, A118, or A101
4	Temperature Cycling	Preconditioning before stress. Grade 0: -55ºC to +150ºC for 2000 cycles or equivalent. Grade 1: -55ºC to +150ºC for 1000 cycles or equivalent. Grade 2: -55ºC to +125ºC for 1000 cycles or equivalent. Grade 3: -55ºC to +125ºC for 500 cycles or equivalent.	JEDEC JESD22-A104 and Appendix 3
5	High Temperature Storage Life	+200ºC Ta for 72 hours.	JEDEC JESD22-A103
6	High Temperature Operating Life	Grade 0: +150ºC Ta for 1000 hours. Grade 1: +125°C Ta for 1000 hours. Grade 2: +105ºC Ta for 1000 hours. Grade 3: +85ºC Ta for 1000 hours. Vcc max.	JEDEC JESD22-A108
7	Solderability	Perform 8 hour steam aging prior to testing (1 hour for Au-plated leads). 260°C±5°C,5sec±1sec., immersing depth≥0.5mm.	JEDEC JESD22-B102 or JEDEC J-STD-002D
8	Physical Dimensions	Applicable JEDEC standard outline and individual device spec for significant dimensions and tolerance.	JEDE JESD22-B100 and B108, AEC Q003
9	Electrostatic Discharge Human Body Model	2kV HBM.	AEC Q100-002

RELIABILITY SPECIFICATIONS

Based on AEC-Q100 Rev. H

No.	Item	Stress and Test Condition	Reference
10	Electrostatic Discharge Charged Device Model	750V corner pins, 500V all other pins.	AEC Q100-011
11	Latch-Up	Maximum ambient operating temperature, maximum operating voltage, 100mA.	AEC Q100-004
12	Mechanical Sock	Y1 plane only, 5 pulses, 0.5 msec duration, 1500 g peak acceleration.	JEDEC JESD22-B104
13	Variable Frequency Vibration	20 Hz to 2 KHz to 20 Hz (logarithmic variation) in >4 minutes, 4X in each orientation, 50 g peak acceleration.	JEDEC JESD22-B103
14	Constant Acceleration	Y1 plane only, 30 K g force.	MIL-STD-883 2001
15	Gross/Fine Leak	Any single-specified fine test followed by any single-specified gross test.	MIL-STD-883 Method 1014
16	Package Drop	Drop part on each of 6 axes once from a height of 1.2m onto a concrete surface.	AEC-Q100 #G6
17	Internal Water Vapor	100˚C, moisture <5000ppm.	MIL-STD-883 Method 1018

PACKING :

8mm-4mm，3000pcs / reel， ϕ178；

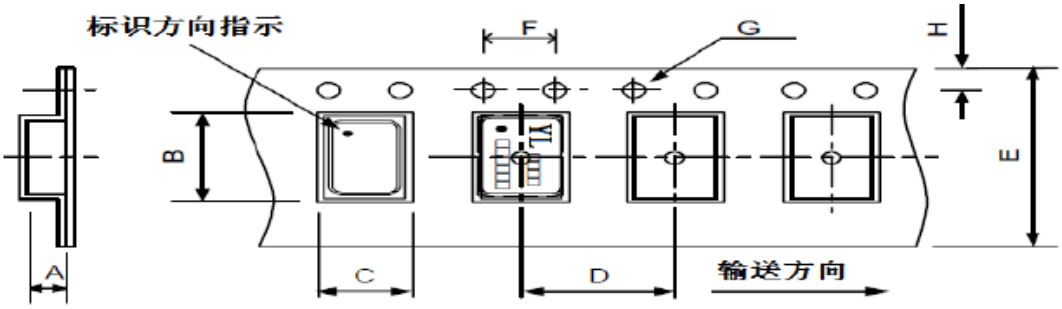

	A	B	C	D	E	F	G	H	单位:
尺寸	1.40 ±0.1	3.40 ±0.1	2.70 ±0.1	4.00	8.00	4.00	1.50	1.75	mm

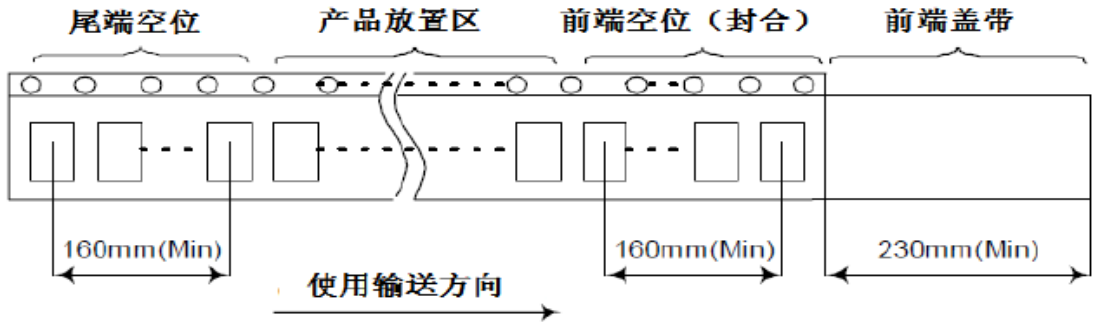

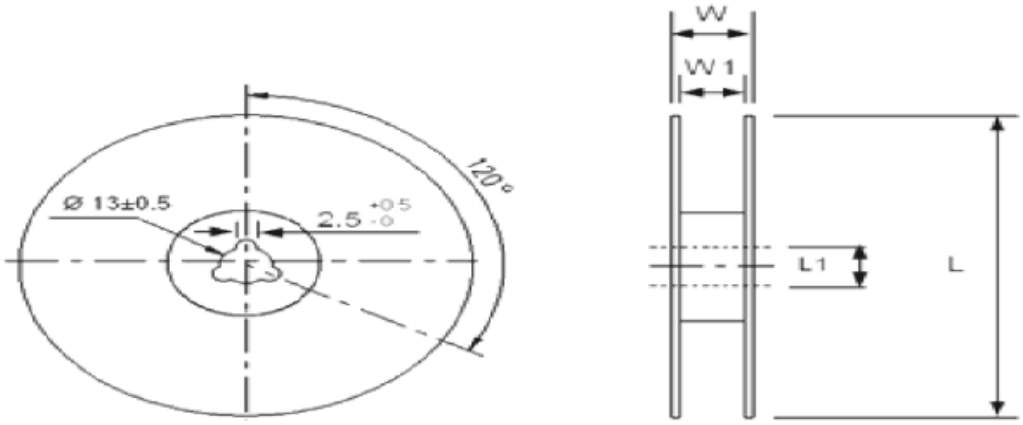

尺寸	L	L1	W	W1	单位:mm
	178	13	11.5	8	每卷数量:3000 支

SMD PRODUCT PACKING STANDARD

Out-going packing instruction

Reel Packing	Inner Packing	Carton
name：reel standard：diameter 18cm material：plastics name：Anti-Static Shielding Bag standard：205×250mm	name：Anti-Static Bubble Bags standard：430x330+20mm material：HDPE(15 reels enter)	name：carton standard：400x400x280mm material：AB corrugated paper (60 boxes enter)
		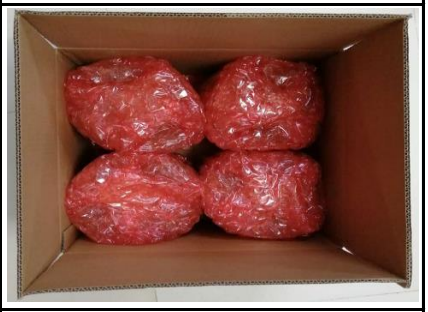
		

The label instruction

Label Drawing	Mark	Name of Article	Spec.	Size	Printing
	L1	条码标签 Bar Code Label (Chintz Paper)	1.Part No. 2.Lot No. 3.Q'ty 4.Freq	70x50mm	White
	L2	条码标签 Bar Code Label (Chintz Paper)	1.Part No. 2.Date Code 3.Q'ty 4.Freq	70x50mm	White

Remark

Specifications on the label is for the use of templates with different product specifications may vary.
If customer specified requirements for labels packaging. please provide the operation procedure.

Range	Products	Packing Material
Banned Substances	**Maximum concentration ppm(mg/kg)**	**Maximum concentration ppm(mg/kg)**
1.镉及镉化合物 Cadmium and cadmium compounds	100	100
2.铅及铅化合物 Lead and lead compounds	1000	100
3.汞及汞化合物 Mercury and mercury compounds	1000	100
4.六价铬化合物 Hexavalent-Chromium VI (Cr+6)	1000	100
5.聚溴联苯 PBB Polybrominated biphenyls	1000	N/A
6.聚溴二苯醚 PBDE Polybrominated diphenyl ethers	1000	N/A
7.邻苯二甲酸二(2-乙基己基)酯 DEHP Di (2-ethylhexyl) phthalate	1000	N/A
8.邻苯二甲酸丁苄酯 BBP Butyl Benzyl Phthalate	1000	N/A
9.邻苯二甲酸二丁酯 DBP Dibutyl Phthalate	1000	N/A
10 邻苯二甲酸二异丁酯 DIBP Diisobutyl Phthalate	1000	N/A
11. 氟（F）、氯（Cl）、溴（Br）、碘（I） Fluorine、Chlorine、 Bromine、Iodine	900、900、900、900 注：Br+Cl＜1000	N/A
12.包装材料中重金属(汞、镉、六价铬、铅、PBB、PBDE)之总量 Heavy metals (mercury, cadmium, lead, Cr+6,PBB and PBDE) in packing materials	N/A	100 铅(Pb) + 镉(Cd) + 汞(Hg) + 六价铬(Cr+6) <100ppm
13.高度关注物质 SVHC-Substances of Very High Concern	1000	N/A


惠伦晶体
FAITH LONG CRYSTAL