PRODUCT SPECIFICATION SHEET



Customer			
Customer P/N	-		
Product Type	Temperature Sensing Crystal		
Part Number	1Z768P2001	**Version**	S0
Part Description	SMD TSX 1.6 x 1.2 (TH + Xtal)		
Nominal Frequency	76.800000MHz		

Prepared	Li Xiang
Reviewed	Kuro Peng
Approved	Li Feng
Date	2023/9/21

Customer's Approval & Date：

广东惠伦晶体科技股份有限公司
中国广东省东莞市黄江镇东环路鸡啼岗段68号
68 Donghuan Road, Jitigang Village, Huangjiang, Dongguan, Guangdong Province, P. R. China
WEB : http://www.dgylec.com/
TEL : +86 (0) 769 - 38879888
FAX : +86 (0) 769 - 38879889
EMAIL : yl@dgylec.com

RoHS COMPLIANT

Pb Lead-Free

Moisture Sensitivity Level 1

CONTENTS

#	Item	Page
1	**History of Specification Revision**	3
2	**Electrical Specifications**	4
	2.1 Specifications for operation condition and electrical characteristics	4
	2.2 Specifications for crystal drive level dependency (DLD)	5
	2.3 Specifications for GPS quality	6
	2.4 NTC thermistor specification table	7
3	**Product Design**	8
	3.1 Package dimensions and pad functions	8
	3.2 Pad connection diagram and function	8
	3.3 Recommended land pattern	8
	3.4 Marking definition	9
	3.5 Recommended reflow profile	9
	3.6 Structure illustration	10
4	**Reliability Assurance**	11
	4.1 Mechanical endurance	11
	4.2 Environmental endurance	11
5	**Taping and Packing**	12
	5.1 Tape and reel	12
	5.2 Packing standard	13
6	**Specification of the Environment-related Substances**	14

* Attention

If you intend to use products on the controlling equipment that relate to medical, aeronautical, aerospace, military science, space and etc, please make sure to let us know your intentions in advance.

Ultrasonic related process may cause damage to crystal blank by resonance itself. If ultrasonic related process is used, we strongly recommend to assess the damage risk under related ultrasonic conditions before use in production.

1. History of Specification Revision

Ver.	Content	Date	Reviser	Remark
S0	Initial released	2023/9/21	Li Xiang	

2. Electrical Specifications

2.1 Specifications for operation condition and electrical characteristics

#	Parameter	Min.	Typ.	Max.	Unit	Remark
1	Nominal frequency		76.800000		MHz	-
2	Crystal cut type		AT-cut		-	-
3	Mode of vibration		Fundamental		-	-
4	Load capacitance (C_L)	-	7.0	-	pF	Note 1.
5	ESD		HBM＞2000V		-	JESD22-A114-B
6	MSL		Level 1		-	IPC/JEDEC J-STD-033C
7	Drive level	10	200	250	μW	-
8	Operating temperature range	-30	-	+105	°C	-
9	Storage temperature range	-40	-	+105	°C	-
10	Initial frequency tolerance	-10	-	+22	ppm	At 25±3°C, drive level 10μW
11	Frequency drift after reflow	-2.0	-	+2.0	ppm	After two times of reflow
12	Frequency tolerance over temperature	-12	-	+12	ppm	Within -30°C to +85°C. Above +85°C see Note 2.
13	Frequency aging	-0.7	-	+0.7	ppm/yr	-
14	Equivalent series resistance (ESR)	-	-	30	Ω	Note 3.
15	Shunt Capacitance (C0)	-	0.5	1.0	pF	-
16	Insulation resistance	500	-	-	MΩ	-
17	SPDB	-	-	-6	dB	-
18	Quality factor (Q)	50,000	-	-	-	Note 4.
19	Spurious mode series resistance	1,100	-	-	Ω	Within ±1 MHz offset.
20	Pullability	10	-	15	ppm/pF	-
21	Inflection point	22.5	-	26.5	°C	Specified at max drive level. $t = \left(t_0 - \frac{C2}{3C3}\right)$
22	First-order curve fitting parameter (C1)	-0.4	-	-0.1	ppm/°C	Note 5.
23	Second-order curve fitting parameter (C2)	-6.0	0	+6.0	$x10^{-4}$ ppm/°C^2	Note 5.
24	Third-order curve fitting parameter (C3)	+8.5	+10.0	+11.5	$x10^{-5}$ ppm/°C^3	Note 5.

Note 1 The load capacitance is measured according to IEC Standard #60444-8.

Note 2 Above 85°C, the frequency tolerance over temperature is bound by the third order coefficient range.

Note 3 The ESR max is specified at max drive level minimum Q, drives a smaller ESR; that is, design the crystal to the minimum Q.

Note 4 The minimum Q value calculated from ESR and L is smaller than this specification.

Note 5 The curve fitting parameter is obtained from the QTI crystal curve fitting algorithm, using the temperature inflection point t_0 = 24.5°C. Refer to Curve Fit Calculation Table Spreadsheet (80-V9695-23).

2. Electrical Specifications (Cont.)

2.2 Specifications for crystal drive level dependency (DLD)

#	Parameter	Min.	Typ.	Max.	Unit	Remark
1	Drive level measurement condition	0.01	-	250	µW	Drive level from 0.01 µW to 250 µW to 0.01 µW
2	Number of points		29		points	15 points up and 15 points down = 29 total data points.
3	DLD Frequency (maximum - minimum)	-	-	6	ppm	Define as FDLD. Note 6.
4	DLD Frequency (repeatability)	-	-	0.7	ppm	Define as FDLDH. Note 7.
5	DLD ESR (maximum)	-	-	30	Ω	Define as RLD2. Note 8.
6	DLD ESR (repeatability)	-	-	10	%	Define as DLDH3. Note 7 and Note 9.
7	DLD ESR (maximum - minimum)	-	-	3	Ω	Define as DLD2 Note 6.

Note 6 Maximum - minimum: Difference between the maximum and minimum in a two-way measurement.
Note 7 Repeatability of the two-way measurement is defined in the above Drive level measurement condition.
Note 8 Maximum: ESR at 250 µW drive level is 30 Ω.
Note 9 For DLD ESR (Repeatability), the change rate is defined as (ESR2 - ESR1)/ESR1.
Note 10 ESR1: This is the first measurement on each drive level.
Note 11 ESR2: This is the second measurement on each drive level.

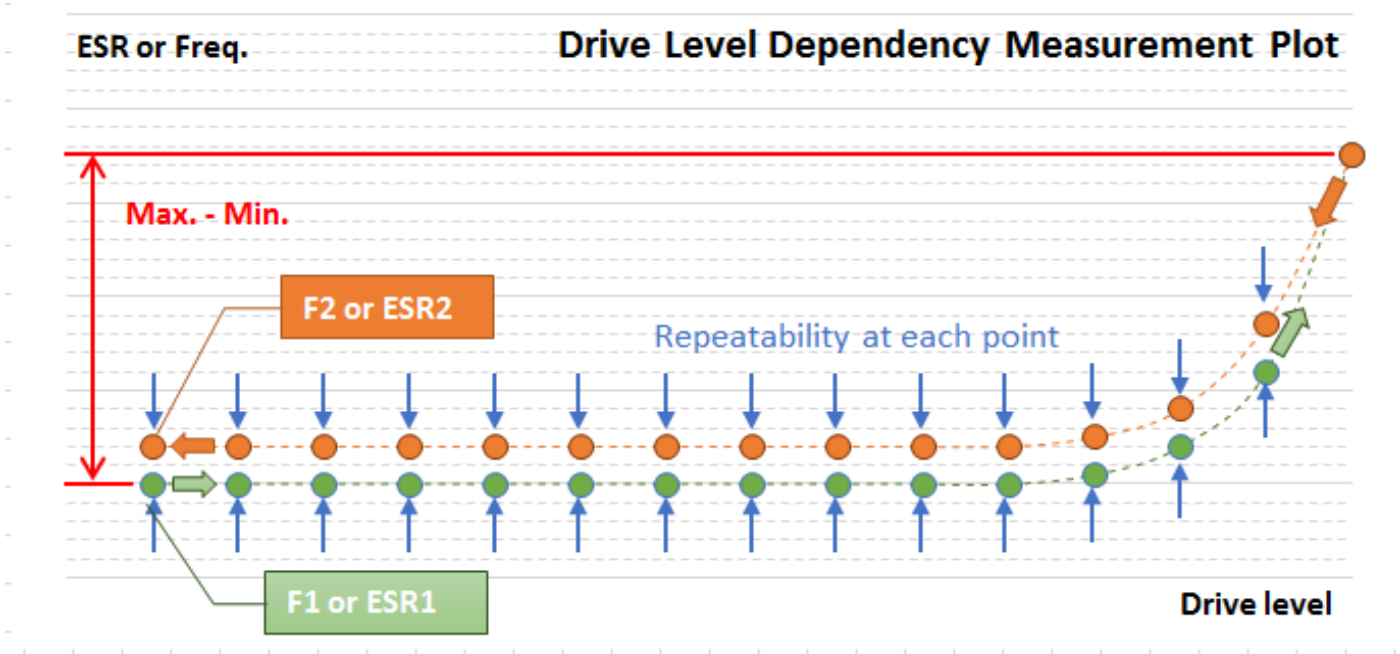

2. Electrical Specifications (Cont.)

2.3 Specifications for GPS quality

#	Parameter	Min.	Typ.	Max.	Unit	Remark
1	Drive level measurement condition		250		µW	All measurements in GPS quality are taken at 250 µW drive level.
2	Residual frequency stability slope 1	-100	-	+100	ppb/°C	Within -30°C to -15°C. Note 13 and Note 14 (Condition 1A).
3	Residual frequency stability slope 2	-50	-	+50	ppb/°C	Within -15°C to +70°C. Note 13 and Note 14 (Condition 1A).
4	Residual frequency stability slope 3	-100	-	+100	ppb/°C	Within +70°C to +85°C. Note 13 and Note 14 (Condition 1A).
5	5°C small orbit hysteresis 1-1	-100	-	+100	ppb/°C	Within -30°C to -15°C. Note 15 (Condition 1B).
6	5°C small orbit hysteresis 1-2	-50	-	+50	ppb/°C	Within -15°C to +70°C. Note 15 (Condition 1B).
7	5°C small orbit hysteresis 1-3	-100	-	+100	ppb/°C	Within +70°C to +85°C. Note 15 (Condition 1B).
8	5°C small orbit hysteresis 2		100 (magnitude)		ppb pk-pk	Within -30°C to +85°C. Note 16.

Note 13 Residual = difference from fifth-order curve fit. Must meet below 1A (Note 14) and 1B (Note 15) conditions:

Note 14 Condition 1A – Test condition (continuous temperature rate change of ~1.0°C/min.):

- Measure F/T points every 1°C, heating up from -30 to +85°C, subtract a fifth-order polynomial best fit and then calculate the slope of the residual.

Note 15 Condition 1B – Hysteresis 1 test condition (continuous temperature rate change of ~1.0°C/minute):

- Measure F/T points every 0.5°C while cycling temperature over a 5°C small temperature orbit; an example 5°C small orbit temperature cycle is +30°C to +35°C to +30°C.
- During every individual heating/cooling cycle, there should be 11 points. Discard the first point of each heating and cooling cycle. This leaves 10 points for each heating and cooling cycle. Subtract the fifth-order polynomial best fit from 1A for each of the 10 points, and then calculate the slope of the residual for each of these heating and cooling 10 point curves.

Note 16 Hysteresis 2 test condition (continuous temperature rate change of ~1.0°C/min.):

- Measure F/T points every 0.5°C while cycling temperature over a 5°C small temperature orbit; an example 5°C small orbit temperature cycle is +30°C to +35°C to +30°C.
- During every individual heating/cooling cycle there should be 11 points; discard the first and last point of each heating and cooling cycle, which results in 9 temperature points. Calculate the average measured peak-to-peak frequency difference for these 9 temperature points.
- The average difference is the magnitude of the small orbit hysteresis 2.

2. Electrical Specifications (Cont.)

2.4 NTC thermistor specification table

#	Parameter	Min.	Typ.	Max.	Unit	Remark
1	Operating temperature range	-30	-	+105	℃	-
2	Storage temperature range	-40	-	+105	℃	-
3	Resistance	-	100	-	kΩ	At 25°C
4	B-constant	-	4,250	-	K	At 25°C - 50°C
5	Tolerance	-	-	1	%	-

*In order to get the precise resistance value of the thermistor, the temperature control will be very important during testing since the resistance value will change ~4% per 1℃ temperature difference.
Please check the following Murata website for detail explanation.
https://www.murata.com/en-us/support/faqs/products/thermistor/ntc/pct/0001

3. Product Design

3.1 Package dimensions and pad functions (Unit : mm)

Top view

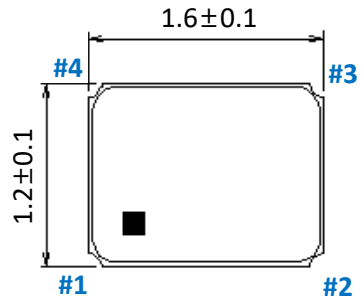

Lateral view

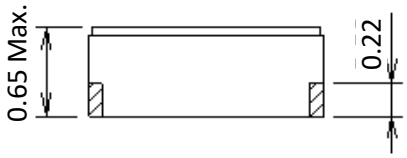

Bottom view

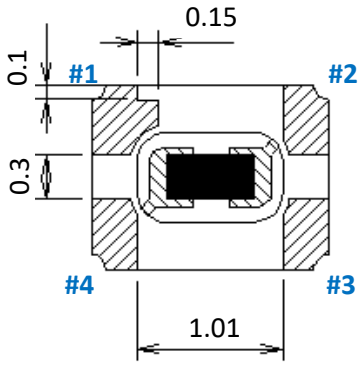

3.2 Pad connection diagram and function

Bottom view

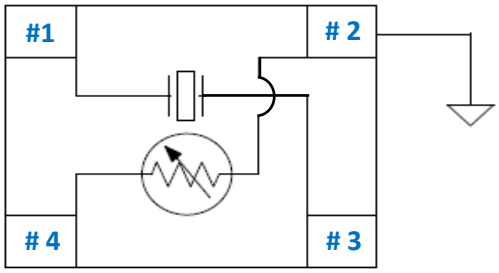

Pad	Function
1	Xtal in
2	Thermistor out, connecting to ground
3	Xtal out
4	Thermistor in

3.3 Recommended land pattern (Unit : mm)

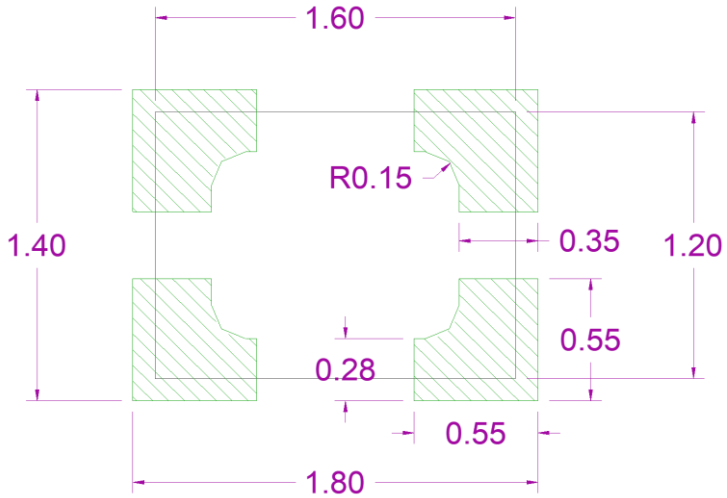

3. Product Design (Cont.)

3.4 Marking definition

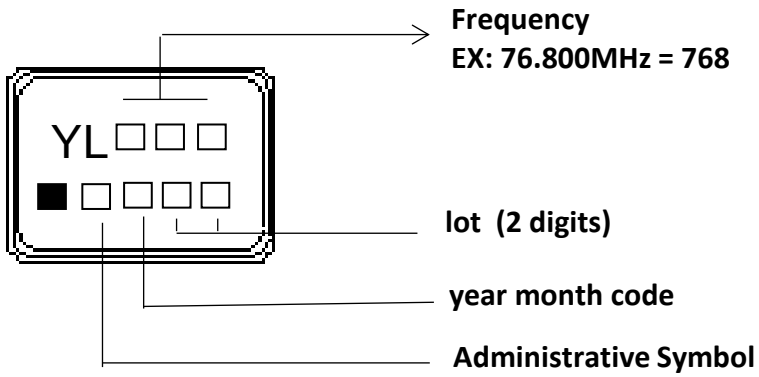

Table of Year and Month code

Year \ Month	JAN	FEB	MAR	APR	MAY	JUN	JUL	AUG	SEP	OCT	NOV	DEC
2021	2025	A	B	C	D	E	F	G	H	J	K	L	M
2022	2026	N	P	Q	R	S	T	U	V	W	X	Y	Z
2023	2027	a	b	c	d	e	f	g	h	j	k	l	m
2024	2028	n	p	q	r	s	t	u	v	w	x	y	z

3.5 Recommended reflow profile

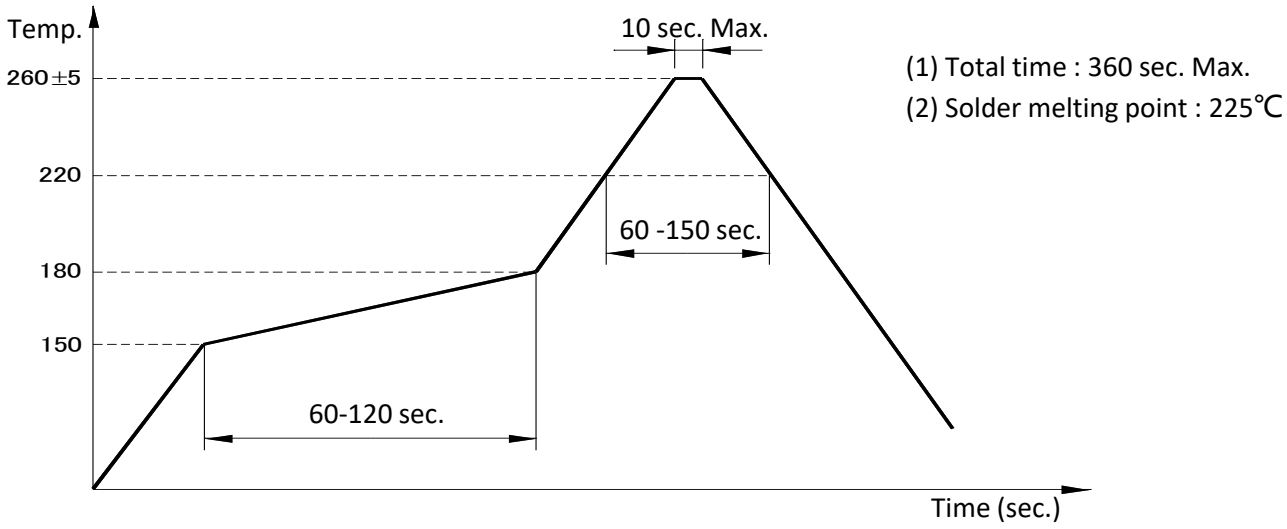

(1) Total time : 360 sec. Max.
(2) Solder melting point : 225℃

3. Product Design (Cont.)

3.6 Structure illustration

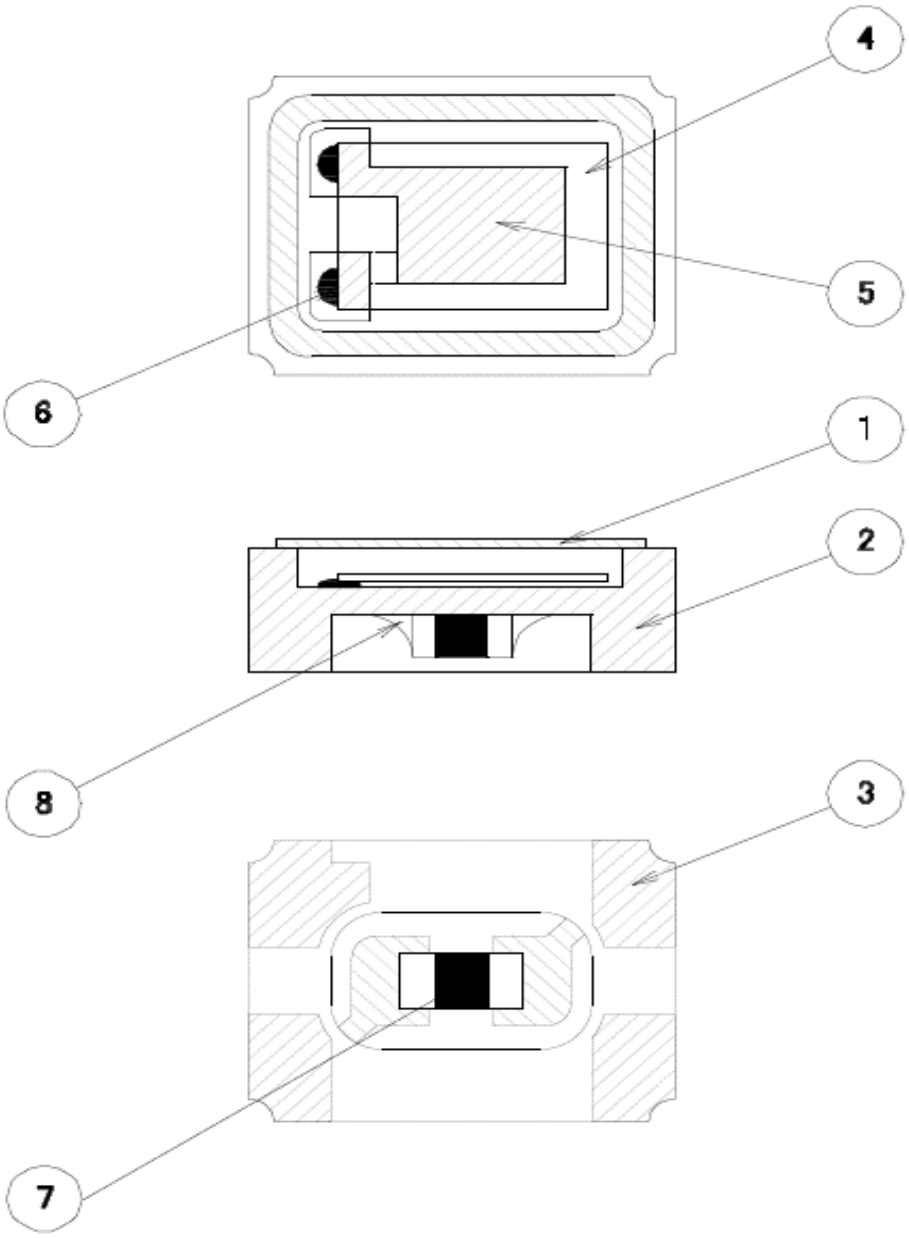

#	Components	Materials	QTY	Finish/Specifications
1	Cap (Lid)	Kovar(Fe+Co+Ni) + AuSn	1	-
2	Base (Package)	Alumina Ceramics (Al_2O_3)	1	-
3	Pad (Package)	Ni + Au	4	Tungsten metalization + Ni plating + Au plating (Ni 1.27~8.89μm.Au 0.3~1.0 μm)
4	Crystal blank	SiO_2	1	-
5	Electrode	Cr + Nobel material	2	
6	Conductive adhesive	Ag	2	Silicone resin
7	Thermistor	Alumina Ceramics (Al_2O_3), Ni + Ag+ Sn	1	-
8	Solder	Sn + Ag + Cu	2	-

4. Reliability Assurance

4.1 Mechanical endurance

#	Item	Test Condition	Reference
1	Drop test	150 cm height, fall freely onto stainless plate, 3 times.	JIS C6701
2	Shock test	150 g weight, 150 cm height onto concrete floor. Each direction (±x, ±y, ±z) for 3 cycles.	IEC-68-02-27
3	Mechanical shock	Half sine wave 1000 G. Three mutually perpendicular axes, each axis for 3 times. Duration time 1.0ms.	MIL-STD-202F
4	Vibration	10 to 55 Hz 0.75mm, 55 to 2000Hz 20G, 4 hours to each three axis (x, y, z). Total test time 6 hours.	MIL-STD-883E
5	Gross Leak	Standard sample for automatic gross leak detector. Test pressure: 2kg /cm^2.	MIL-STD-883E
6	Fine Leak	Helium bombing 4.5 kgf/cm^2 for 2 hours.	MIL-STD-883E
7	Solderability	Temperature : 260°C ± 5°C Immersing depth : 0.5 mm minimum Immersion time : 5 ± 1 seconds Flux : Rosin resin methyl alcohol solvent (1:4)	GB/T 2424.17-2008 / IEC 60068-2-44:1995； GB/T 2423.28-2005 / IEC 60068-2-20:1979

*Storage conditions： 18 months *Constant humidity： 40~70%

4.2 Environmental endurance

#	Item	Test Condition	Reference
1	High temperature storage	Temperature : +125°C ± 3°C Duration : 500 ± 12 hours	MIL-STD-883E
2	Low temperature storage	Temperature : -40°C ± 3°C Duration : 500 ± 12 hours	MIL-STD-883E
3	Thermal shock (Air to Air)	Total 100 cycles of the following temperature cycle 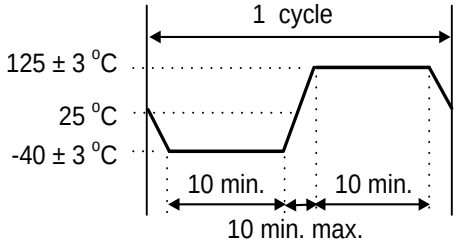	MIL-STD-883E
4	High temperature & humidity	Temperature : 85°C ± 3°C Humidity : RH 85% Duration : 500 hours	JIS C5023

5. Taping and Packing

5.1 Tape and reel (EIA-481-2)

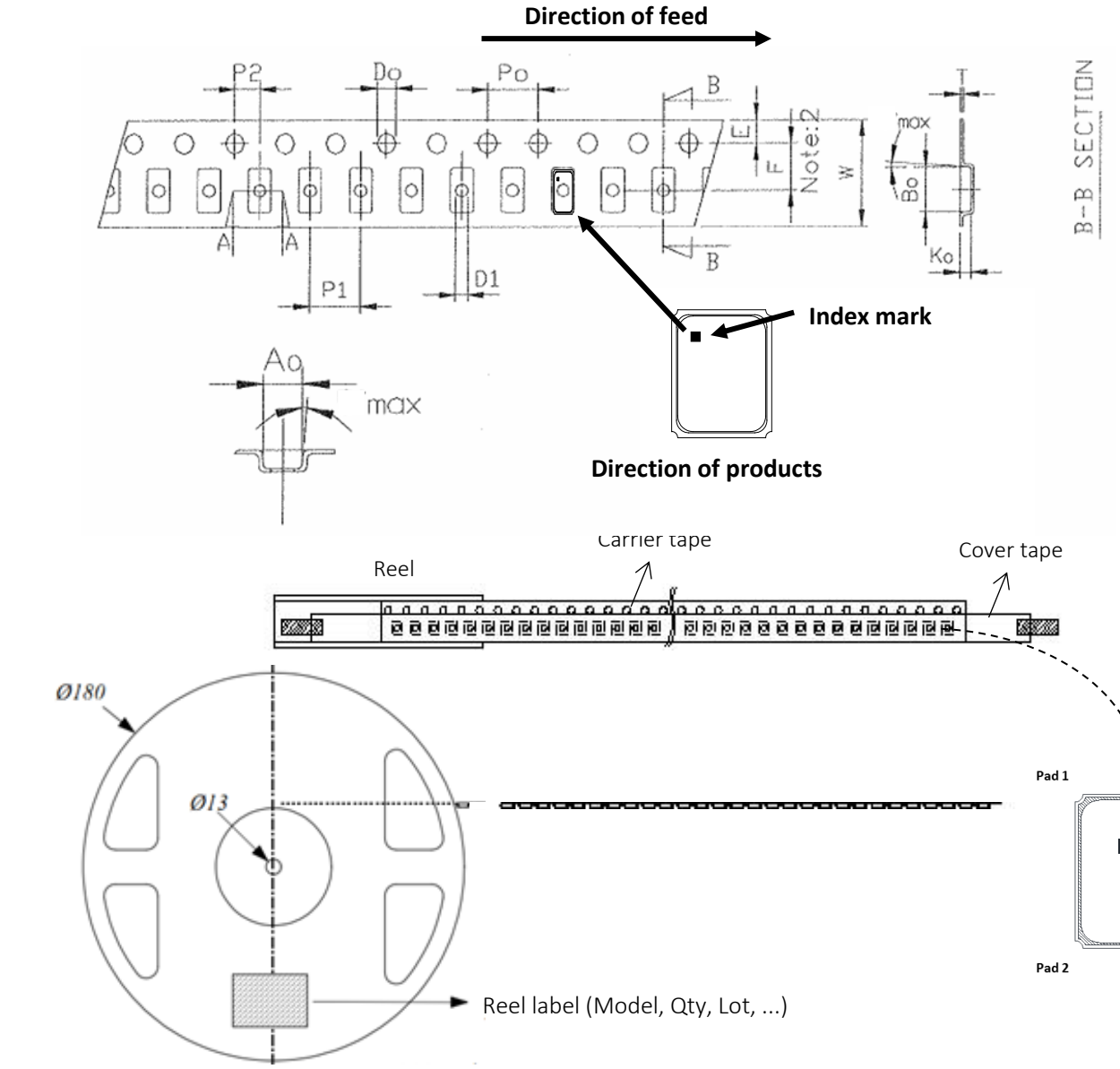

Package Type	Dimension (Unit : mm)						
1612 TSX (8mm)	A_0	B_0	K_0	T	W	E	F
	1.45±0.1	1.85±0.1	0.8±0.10	0.25±0.05	8.00±0.3	1.75±0.1	3.50±0.1
	P1	P2	D1	D_0	P_0		
	4.00±0.1	2.00±0.1	1.20±0.1	1.55±0.05	4.00±0.1		

Standard Reel Quantity is 3000 pcs per reel.

The inspection standard of tape tension

Item		Defect	Method
Appearance	All	1. The tape is not coincidence 2. The bubble	Visual inspection
Tape tension	1612 - 8mm	Overstep 34±6g (28 to 40g)	Pull test

5. Taping and Packing (Cont.)

5.2 Packing standard

Out-going packing instruction

Reel packing	Inner packing	Carton
Name：Reel Standard：Diameter 18cm Material：Plastics Name：Anti-static shielding bag Standard：205×250mm Material：APET/CPP	Name：Bubble wrap Standard：430×330×(t)20mm Material：HDPE Quantity : Max.15 reels	Name：Carton Standard：400×400×(H)280mm Material：AB corrugated paper Quantity：4 bags
		 

The label information

Label	Label Drawing	Name of Article	Spec.	Label size	Printing
L1		条码标签 Bar Code Label (Chintz Paper)	1. Part No. 2. Lot No. 3. Q'ty 4. Freq.	70×50mm	White
L2		条码标签 Bar Code Label (Chintz Paper)	1. Part No. 2. Date Code 3. Q'ty 4. Freq.	70×50mm	White

Remark: Specifications on the label is for default templates purpose and may change with different product.
If any specified requirements for labels packaging is needed, please provide the instruction information.

6. Specification of the Environment-related Substances

#	Range	Max. concentration (ppm; mg/kg)	
	Banned Substances	Product	Packing
1	镉及镉化合物 Cadmium and cadmium compounds	100	100
2	铅及铅化合物 Lead and lead compounds	1000	100
3	汞及汞化合物 Mercury and mercury compounds	1000	100
4	六价铬化合物 Hexavalent-Chromium VI (Cr^{+6})	1000	100
5	聚溴联苯 PBB Polybrominated biphenyls	1000	N/A
6	聚溴二苯醚 PBDE Polybrominated diphenyl ethers	1000	N/A
7	邻苯二甲酸二(2-乙基己基)酯 DEHP Di (2-ethylhexyl) phthalate	1000	N/A
8	邻苯二甲酸丁苄酯 BBP Butyl Benzyl Phthalate	1000	N/A
9	邻苯二甲酸二丁酯 DBP Dibutyl Phthalate	1000	N/A
10	邻苯二甲酸二异丁酯 DIBP Diisobutyl Phthalate	1000	N/A
11	氟(F)、氯(Cl)、溴(Br)、碘(I) Fluorine, Chlorine, Bromine, Iodine	900、900、900、900 注：Br + Cl < 1000	N/A
12	包装材料中重金属(汞、镉、六价铬、铅、PBB、PBDE)之总量 Heavy metals (mercury, cadmium, lead, Cr^{+6},PBB and PBDE) in packing materials	N/A	100 铅(Pb) + 镉(Cd) + 汞(Hg) + 六价铬(Cr+6) <100ppm
13	高度关注物质 SVHC-Substances of Very High Concern	1000	N/A