广东惠伦晶体科技股份有限公司
GUANGDONG FAITH LONG CRYSTAL TECHNOLOGY Co.,Ltd.
NO.68 Huangjiang Donghuan Road，Huangjiang Town，Dongguan City，Guangdong Province，China
TEL :+86(0)769-38879888 Fax :+86(0)769-38879889 E-mail : yl@dgylec.com

PRODUCT SPECIFICATION SHEET

CUSTOMER	:	
PRODUCT TYPE	:	OSC 2.5X2.0 (4PAD)
NOMINAL FREQ.	:	24.000000 MHz
FL P/N	:	2C24000004
REVISION	:	S0
CUSTOMER P/N	:	

CUSTOMER'S APPROVAL&DATE

FL CORPORATION

APPROVED	CHECKED	DESIGNED
Liu Feng	Huang Ji Ning	Li Xiang

MSL1

RoHS Compliant

CONTENTS **PAGE**

- SPECIFICATION REVISION RECORD SHEET 2
- ELECTRICAL SPECIFICATIONS 3
- DIMENSIONS & MARKING 4
- STRUCTURE ILLUSTRATION 5
- RELIABILITY TEST SPECIFICATIONS 6
- PACKAGING REQUIREMENT 7/8
- SPECIFICATION OF THE ENVIRONMENT-RELATED SUBSTANCES 9

ATTACHMENT（optional）

- ELECTRICAL CHARACTERISTICS TEST A ☐ YES ☑ NO
- TEMPERATURE CHARACTERISTICS TEST B ☐ YES ☑ NO

Attention

- If you intend to use products on the controlling equipment that relate to medical, aeronautical, aerospace, military science, space and etc, please make sure to let us know your intentions in advance.
- Ultrasonic related process may cause damage to crystal blank by resonance itself. If ultrasonic related process is used, we strongly recommend to assess the damage risk under related ultrasonic conditions before use in production.

SPECIFICATION REVISION RECORD SHEET

Rev.	Revise page	Revise Contents	Date	Ref. No.	Reviser
S0	N/A	Initial released	16-Oct-23	N/A	Li Xiang

ELECTRICAL SPECIFICATIONS

Standard atmospheric conditions

Unless otherwise specified. The standard range of atmospheric conditions for making measurement and tests are as follow:

Ambient temperature 25±2℃
Relative humidity 40%~70%

If there is no doubt the results, measurement shall be made within the following limits:

Ambient temperature 25±2℃
Relative humidity 40%~70%

Measure equipment

Electrical characteristics measured by S&A 280B or equivalent.

Crystal cutting type

The crystal is using AT CUT (thickness shear mode)

ELECTRICAL SPECIFICATIONS

Parameters	Symbol	Electrical Spec.	UNITS	Notes
Nominal Frequency	FL	24.000000	MHz	-
Operating Temperature	TOPR	-40 ~ +90	℃	-
The Total Frequency Offset	-	+/-30	ppm	-
Output Load	CL	15.0	p F	Max
Supply Voltage	VDD	2.5	V	-
“0”Level	VOL	VDD×0.1	V	Max
“1”Level	VOH	VDD×0.9	V	Min
Enable High Voltage	ELH	VDD×0.7	V	Min.
Enable Low Voltage	ELL	VDD×0.3	V	Max.
Symmetry of Wave Form	Symmetry	45~55%		-
Current Consumption	IDD	1.6~2	m A	Max
Rise and Fall Time	Tr,Tf	5.0	nSec	Max
Start time	tosc	10.0	mSec	Max
Aging	-	+/-5	ppm	1st Year
Storage Temperature Range	-	-55 ~ +125	℃	-
Output waveform		CMOS		
ESD	-	HBM＞2000V	-	JESD22-A114-B
MSL	-	Level 1	-	IPC/JEDEC J-STD-033C

DIMENSIOI

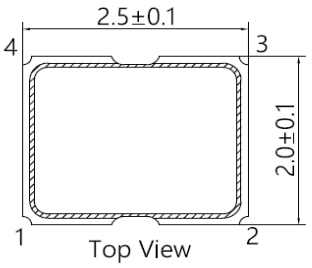

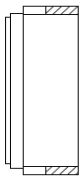

PAD FUNCTION
1: ENABLE CONTROL
2: GND
3: OUT
4: VDD

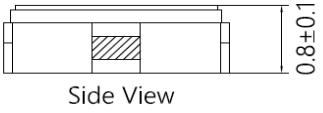

Enable Control

Pad 1 Input	Pad 3 Output
Level High or Open	Normal Operation
Level Low	Stopped

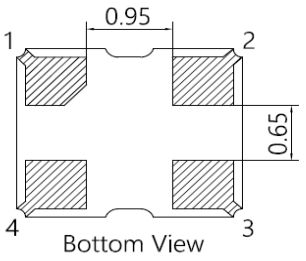

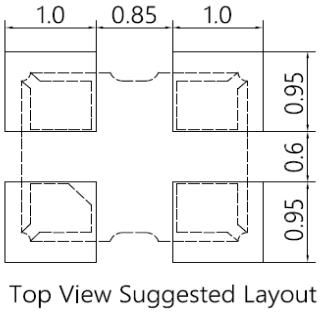

MARKING

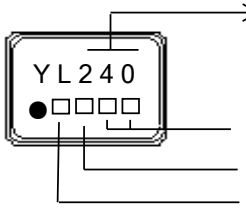

Frequency
Ex：240=24.000MHz

Lot （2 digits）
Year Month Code
Administrative Symbol

year \ month		JAN	FEB	MAR	APR	MAY	JUN	JUL	AUG	SEP	OCT	NOV	DEC
2021	2025	A	B	C	D	E	F	G	H	J	K	L	M
2022	2026	N	P	Q	R	S	T	U	V	W	X	Y	Z
2023	2027	a	b	c	d	e	f	g	h	j	k	l	m
2024	2028	n	p	q	r	s	t	u	v	w	x	y	z

SUGGESTED REFLOW PROFILE

Total time : 360 sec. Max.
Solder melting point : 225 °C

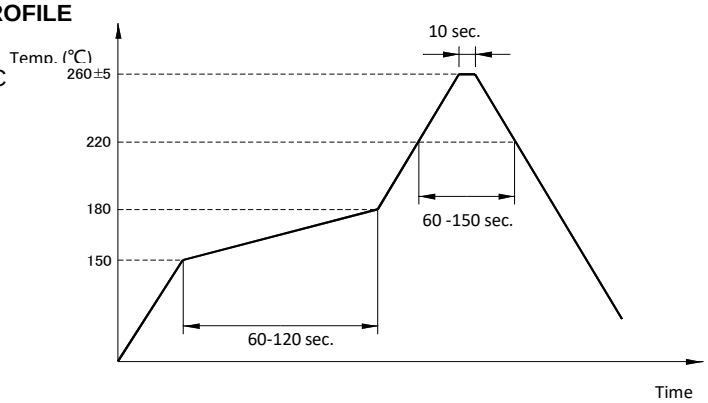

STRUCTURE ILLUSTRATION

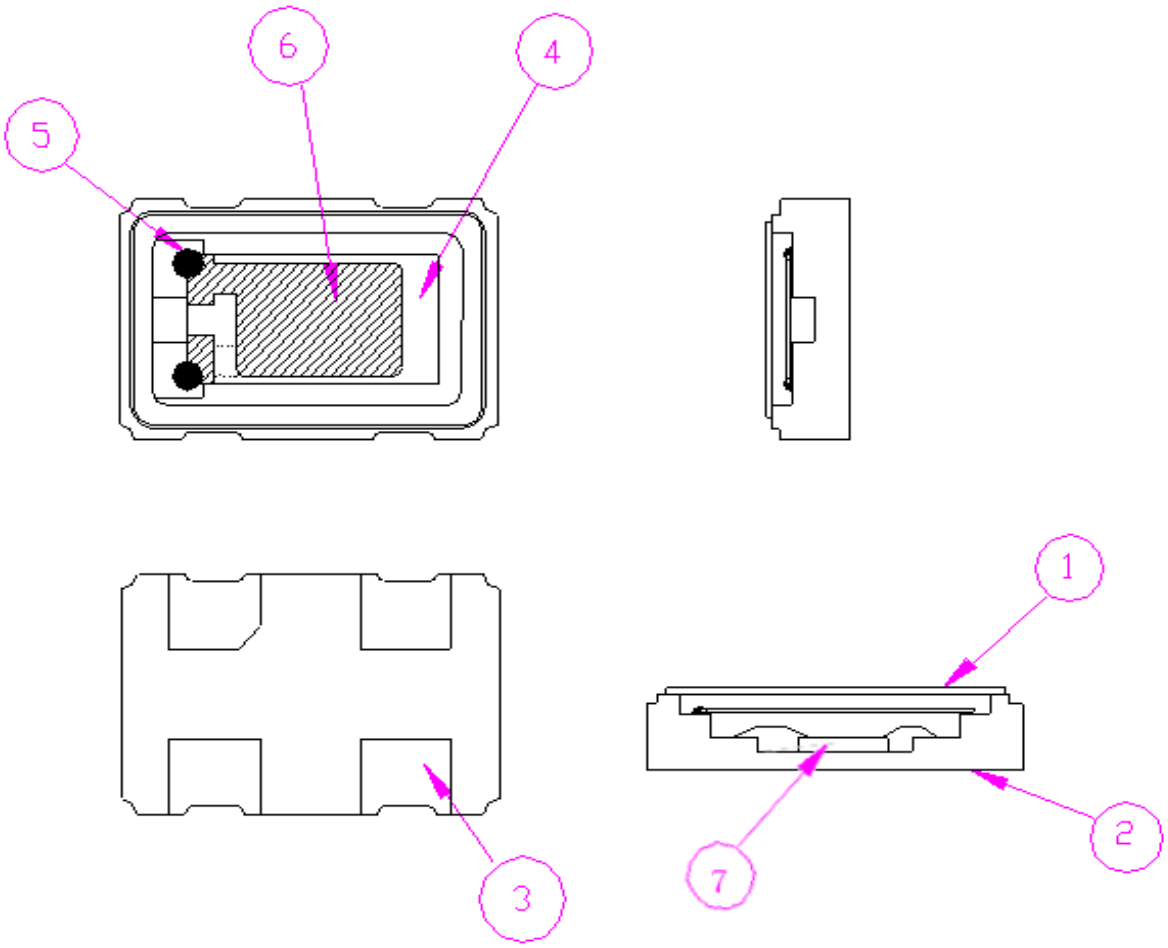

NO	COMPONENTS	MATERIALS	QTY	FINISH/SPECIFICATIONS
1	Cap (Lid)	Metal (Fe)	1	-
2	Base (Package)	Ceramic (Al_2O_3)	1	Alumina ceramics
3	Pad (Package)	Au	4	Tungsten metalize +Ni plating +Au plating
4	Crystal blank	SiO_2	1	-
5	Conductive adhesive	Ag	4	Silicone resin
6	Electrode	Noble metal	2	-
7	IC	Silicon (Si)	1	-

RELIABILITY SPECIFICATIONS

1.MECHANICAL ENDURANCE

No.	Test Item	Test Methods		
1	Drop Test	150 cm height, fall freely onto stainless plate 3 times.		JIS C6701
2	Mechanical Shock	Device are shocked to half sine wave (1000 G) three mutually pendicular axes each 3 times. 1.0m sec. duration time		MIL-STD-202F
3	Vibration	Frequency range Amplitude Pendicular axes each test time	10 ~ 55 Hz 1.52 mm 2 hours（x,y,z Axis） Total test time 6 hours	MIL-STD-883E
4	Solderability	Temperature Immersing depth Immersion time Flux	260°C +/- 5 °C , 5 +/-1 sec 0.5 mm minimum 10 +/- 0.5 seconds Rosin resin methyl alcohol solvent (1 : 4)	MIL-STD-883E
5	Resistance To Soldering Heat	Pre-heat temperature Pre-heat time Test temperature Test time	125 °C 60 ~ 120 sec. 260 +/- 5 °C 5 +/- 1 sec.	MIL-STD-202F

*Storage conditions ： 18 months

*Constant humidity ： 40~70%

2.ENVIRONMENTAL ENDURANCE

No.	Test Item	Test Methods	
6	High Temp. Storage	+ 125 °C +/- 3 °C for 500 +/- 12 hours	MIL-STD-883E
7	Low Temp. Storage	- 40 °C +/- 3 °C for 500 +/- 12 hours	
8	Thermal Shock	Total 100 cycles of the following temperature cycle 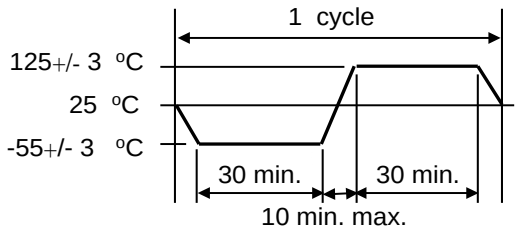	MIL-STD-883E
9	High Temp. Operation	+ 85°C, VCC, for 1000 hours	MIL-STD-883E
10	Low Temp. Operation	- 40°C, VCC, for 1000 hours	MIL-STD-883E

PACKING :

8mm-4mm，3000pcs / reel， ϕ178；

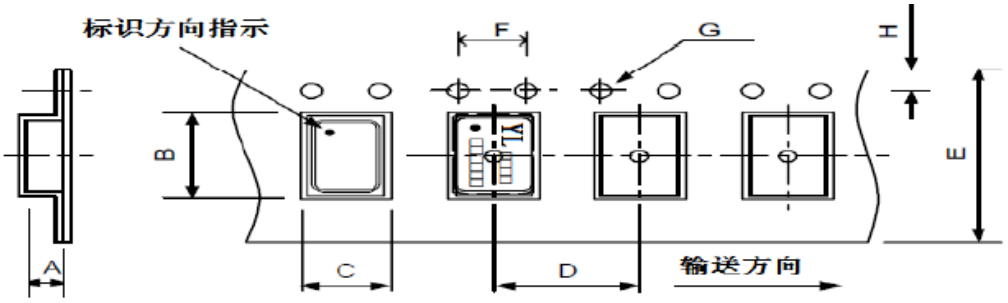

尺寸	A	B	C	D	E	F	G	H	单位: mm
	1.55 ±0.1	2.70 ±0.1	2.25 ±0.1	4.00	8.00	4.00	1.50	1.75	

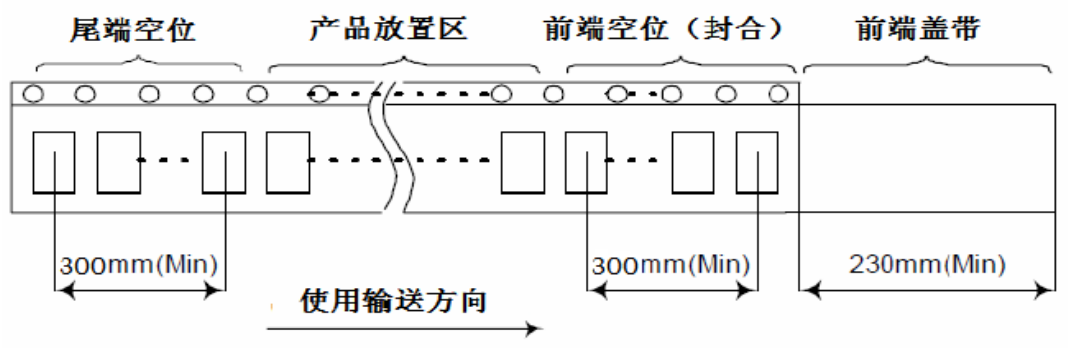

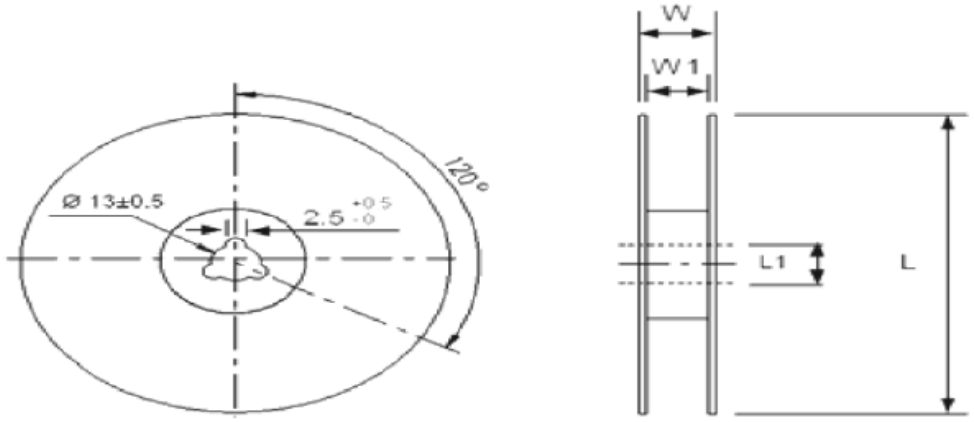

尺寸	L	L1	W	W1	单位:mm 每卷数量:3000 支
	178	13	11.5	8	

SMD PRODUCT PACKING STANDARD

Out-going packing instruction

Reel Packing	Inner Packing	Carton
name：reel standard：diameter 18cm material：plastics name：Anti-Static Shielding Bag standard：205×250mm	name：Anti-Static Bubble Bags standard：430x330+20mm material：HDPE(15 reels enter)	name：carton standard：400x400x280mm material：AB corrugated paper (60 boxes enter)
		
		

The label instruction

Label Drawing	Mark	Name of Article	Spec.	Size	Printing
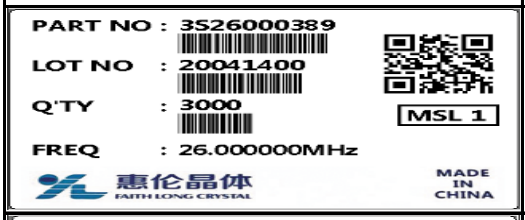	L1	条码标签 Bar Code Label (Chintz Paper)	1.Part No. 2.Lot No. 3.Q'ty 4.Freq	70x50mm	White
	L2	条码标签 Bar Code Label (Chintz Paper)	1.Part No. 2.Date Code 3.Q'ty 4.Freq	70x50mm	White

Remark

Specifications on the label is for the use of templates with different product specifications may vary.
If customer specified requirements for labels packaging. please provide the operation procedure.

Range	Products	Packing Material
Banned Substances	**Maximum concentration ppm(mg/kg)**	**Maximum concentration ppm(mg/kg)**
1.镉及镉化合物 Cadmium and cadmium compounds	100	100
2.铅及铅化合物 Lead and lead compounds	1000	100
3.汞及汞化合物 Mercury and mercury compounds	1000	100
4.六价铬化合物 Hexavalent-Chromium VI (Cr+6)	1000	100
5.聚溴联苯 PBB Polybrominated biphenyls	1000	N/A
6.聚溴二苯醚 PBDE Polybrominated diphenyl ethers	1000	N/A
7.邻苯二甲酸二(2-乙基己基)酯 DEHP Di (2-ethylhexyl) phthalate	1000	N/A
8.邻苯二甲酸丁苄酯 BBP Butyl Benzyl Phthalate	1000	N/A
9.邻苯二甲酸二丁酯 DBP Dibutyl Phthalate	1000	N/A
10 邻苯二甲酸二异丁酯 DIBP Diisobutyl Phthalate	1000	N/A
11. 氟（F）、氯（Cl）、溴（Br）、碘（I） Fluorine、Chlorine、 Bromine、Iodine	900、900、900、900 注：Br+Cl＜1000	N/A
12.包装材料中重金属(汞、镉、六价铬、铅、PBB、PBDE)之总量 Heavy metals (mercury, cadmium, lead, Cr+6,PBB and PBDE) in packing materials	N/A	100 铅(Pb) + 镉(Cd) + 汞(Hg) + 六价铬(Cr+6) <100ppm
13.高度关注物质 SVHC-Substances of Very High Concern	1000	N/A


惠伦晶体
FAITH LONG CRYSTAL