广东惠伦晶体科技股份有限公司
GUANGDONG FAILONG CRYSTAL TECHNOLOGY Co.,Ltd.
36 Donghuan Road,Jitigang Village,Huangjiang,Dongguan,Guangdong Province,P.R.China
TEL :+86(0)769-38879888 Fax :+86(0)769-38879889 E-mail : yl@dgylec.com

PRODUCT SPECIFICATION SHEET

CUSTOMER	:	
PRODUCT TYPE	:	HC-49S
NOMINAL FREQ.	:	25.000000 MHz
FL P/N	:	DS25000091
REVISION	:	S0
CUSTOMER P/N	:	

CUSTOMER'S APPROVAL&DATE

FL CORPORATION

APPROVED	CHECKED	DESIGNED
Antian KeShi	Luo Jinsong	Zhai XueLing

MSL1

RoHS Compliant

CONTENTS **PAGE**

- SPECIFICATION REVISION RECORD SHEET 2
- ELECTRICAL SPECIFICATIONS 3
- DIMENSIONS & MARKING 4
- STRUCTURE ILLUSTRATION 5
- RELIABILITY TEST SPECIFICATIONS 6
- PACKAGING REQUIREMENT 7/8
- SPECIFICATION OF THE ENVIRONMENT-RELATED SUBSTANCES 9

ATTACHMENT（optional）

- ELECTRICAL CHARACTERISTICS TEST A ☐ YES ☑ NO
- TEMPERATURE CHARACTERISTICS TEST B ☐ YES ☑ NO

SPECIFICATION REVISION RECORD SHEET

Rev.	Revise page	Revise Contents	Date	Ref. No.	Reviser
S0	N/A	Initial released	11-Dec-19	N/A	Chen XuanRu

PRODUCT DESCRIPION

Standard atmospheric conditions

Unless otherwise specified. The standard range of atmospheric conditions for making measurement and tests are as follow:

Ambient temperature 25±2℃
Relative humidity 40%~70%

If there is no doubt the results, measurement shall be made within the following limits:

Ambient temperature 25±2℃
Relative humidity : 40%~70%

Measure equipment

Electrical characteristics measured by S&A250B or equivalent.

Crystal cutting type

The crystal is using AT CUT (thickness shear mode)

ELECTRICAL SPECIFICATIONS

	Parameters	Symbol	Electrical Spec.	UNITS	Notes
1	Nominal Frequency	FL	25.000000	MHz	-
2	Oscillation Mode	-	Fund	-	-
3	Load Capacitance	CL	18.0	p F	-
4	Frequency Tolerance	-	+/-10	ppm	at 25±2℃
5	Operating Temperature	-	-20～+70℃	℃	-
6	Frequency Stability (reference 25℃)	-	+/-30	ppm	-20～+70℃
7	Drive Level	DL	100.0	u W	-
8	Effective Resistance Rr	ESR	< 20.0	ohm	-
9	Shunt Capaitance C0	C0	＜5	p F	-
10	Insulation Resistance	IR	>500	M-ohm	at DC 100V
11	Aging	-	+/-5	ppm	1st Year
12	Reflow shift	-	+/-5	ppm	at 265±2℃*10sec
13	Storage Temperature Range	-	-40～+85℃	℃	-
14	ESD	-	HBM>2000V	℃	JESD22-A114-B
15	Others	-	-	-	-

DIMENSIONS UNITS: MM

49S MODE

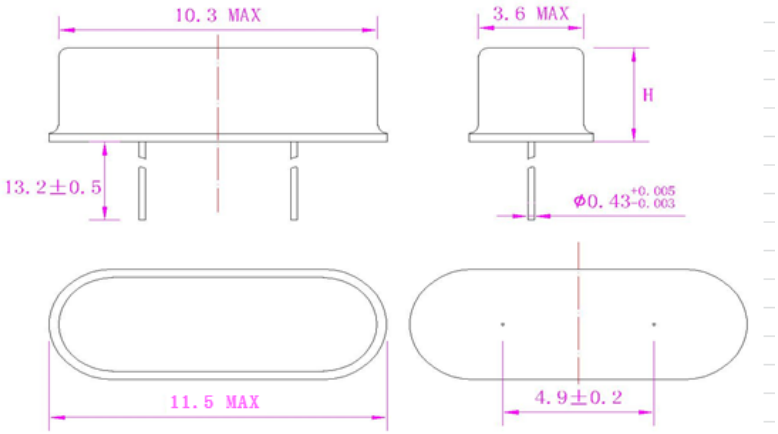

OPTION	HOLDER	H
■	49S	3.3±0.3 mm
□	49SS	2.3±0.3 mm

49SMD MODE

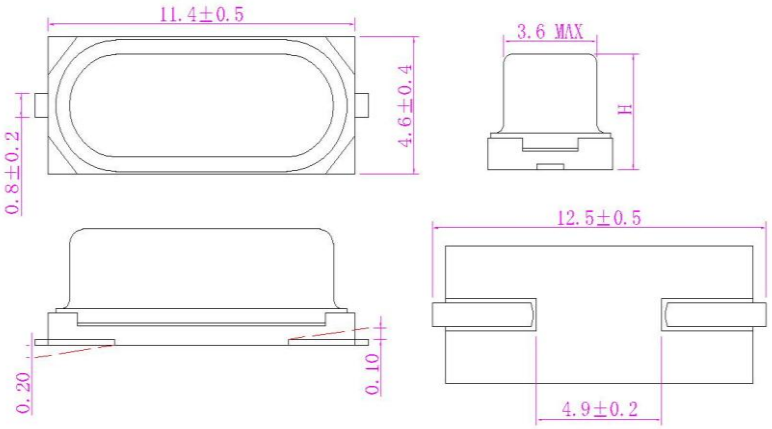

OPTION	HOLDER	H
□	SMD-49S	4.1±0.3 mm
□	SMD-49SS	3.1±0.3 mm

MARKING

YL
XXXX D G KK

XXXX：Frequency
D：Company code（Y）
G：Year month code
KK：Lot No.

year \ month	JAN	FEB	MAR	APR	MAY	JUN	JUL	AUG	SEP	OCT	NOV	DEC
2017	2021	A	B	C	D	E	F	G	H	J	K	L	M
2018	2022	N	P	Q	R	S	T	U	V	W	X	Y	Z
2019	2023	a	b	c	d	e	f	g	h	j	k	l	m
2020	2024	n	p	q	r	s	t	u	v	w	x	y	z

SUGGESTED REFLOW PROFILE

Total time : 200 sec. Max.

Solder melting point :185 °C

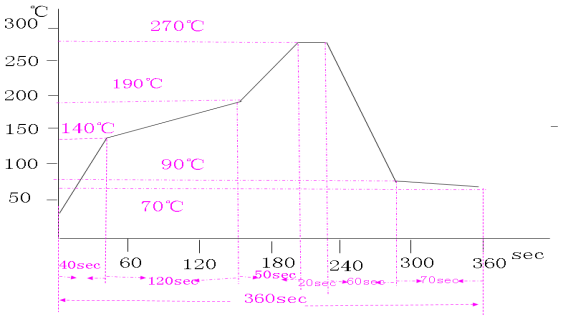

STRUCTURE ILLUSTRATION

49S/49SMD MODE

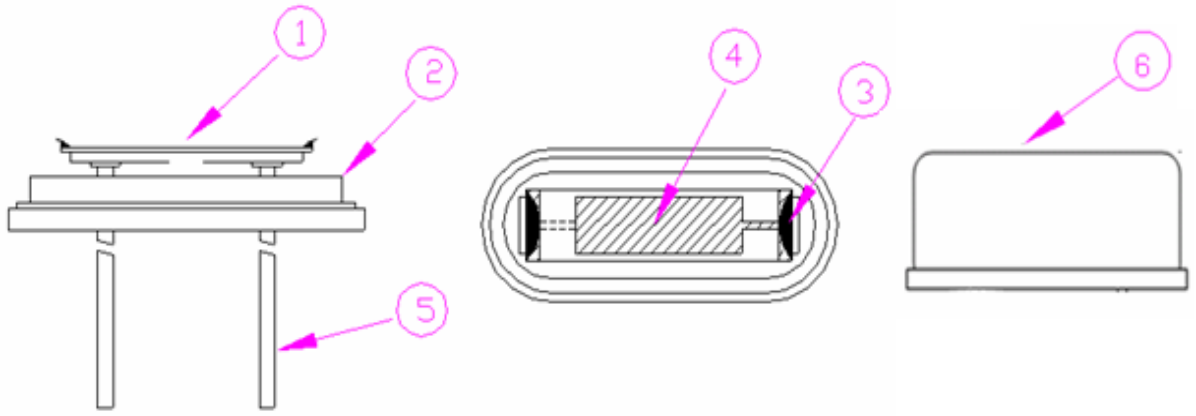

49M MODE

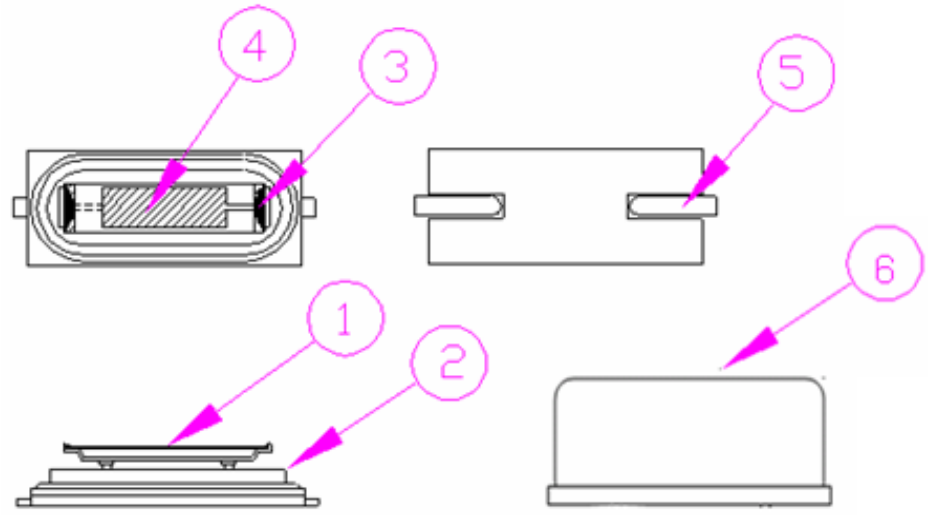

NO	COMPONENTS	MATERIALS	QTY	FINISH/SPECIFICATIONS
1	CRYSTAL BLANK	SiO2	1	-
2	BASE	SPCC-SD	1	-
3	ONDUCTIVE ADHESIV	Ag +Resin	2	-
4	ELECTRODE	Noble metal	2	-
5	LEAD	Kovar	2	-
6	COVER/CAN	Kovar	1	

RELIABILITY SPECIFICATIONS

1.MECHANICAL ENDURANCE

No.	Test Item	Test Methods		
1	Drop Test	50 cm height, fall freely onto stainless plate 3 times.		JIS C6701
2	Vibration	Frequency range Amplitude Sweep time Pendicular axes each test time	10 ~ 2000 Hz 1.52 mm 20 minute 4 hours (Total test time 12 hours)	MIL-STD-883E
3	Solderability	Temperature Immersing depth Immersion time Flux	255 °C +/- 5 °C 0.5 mm minimum 10 +/- 0.5 seconds Rosin resin methyl alcohol solvent (1 : 4)	MIL-STD-883E
4	Resistance To Soldering Heat	Pre-heat temperature Pre-heat time Test temperature Test time	125 °C 60 ~ 120 sec. 260 +/- 5 °C 5 +/- 1 sec.	MIL-STD-202F

2.ENVIRONMENTAL ENDURANCE

No.	Test Item	Test Methods	
5	High Temp. Storage	+ 125 °C +/- 2 °C for 500 +/- 12 hours	MIL-STD-883E
6	Low Temp. Storage	- 40 °C +/- 2 °C for 500 +/- 12 hours	
7	Thermal Shock	Total 10 cycles of the following temperature cycle 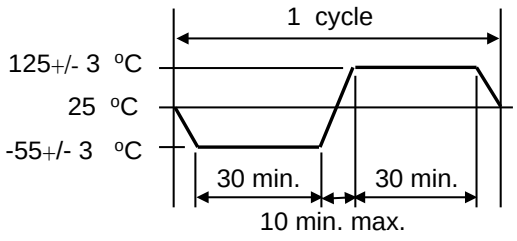	MIL-STD-883E

PACKING :

49S/49SMD MODE

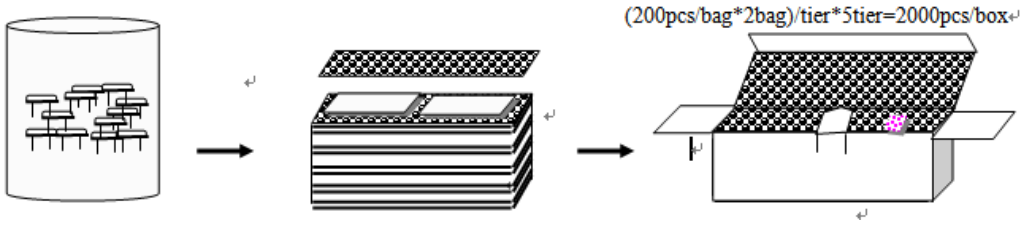

49M MODE

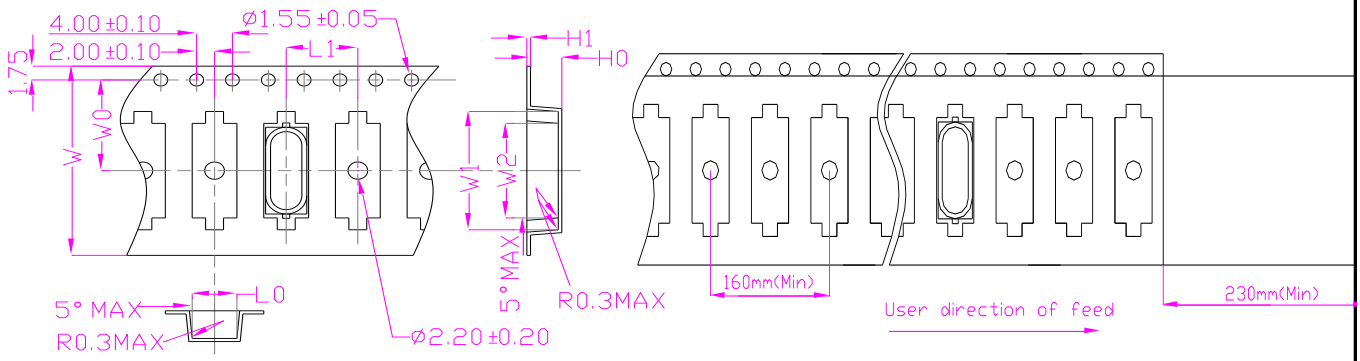

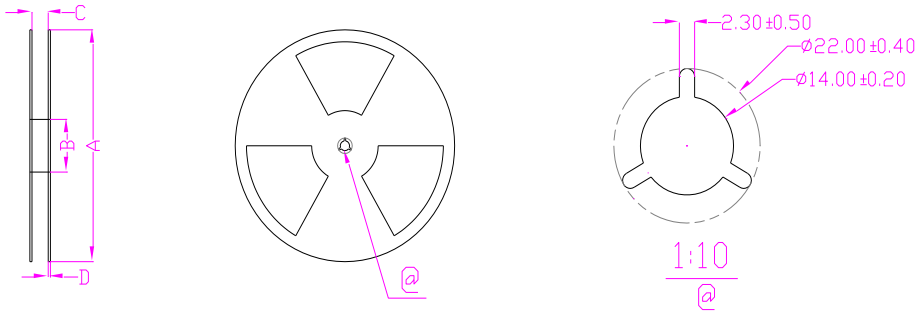

Dimension / Type	Unit : mm						
	W	**W0**	**W1**	**W2**	**L0**	**L1**	**H0**
SMD-49S	24±0.3	11.5±0.1	15±0.1	12±0.1	5±0.1	8/12±0.1	0.4±0.05
	H1	**A**	**B**	**C**	**D**		
	4.25/3.5±0.2	330±2.0	100±1.0	24.5±1.0	2.4±0.2		

Standard Reel Quantity is 1,000 pcs per reel.

REMARK : NA

SMD PRODUCT PACKING STANDARD

Out-going packing instruction

Reel Packing	Inner Packing	Carton
name：reel standard：diameter 18cm material：plastics	name：inner box standard：L19.0xW19.0xH2.5cm material：B corrugated paper	name：carton standard：L34.0xW22.0xH22.0cm material：AB corrugated paper(10 boxes enter)
	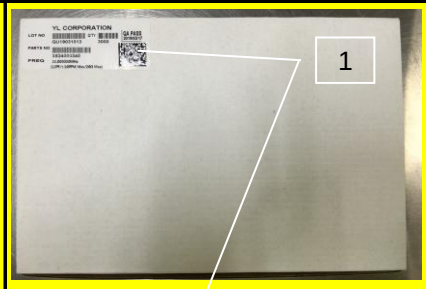	
	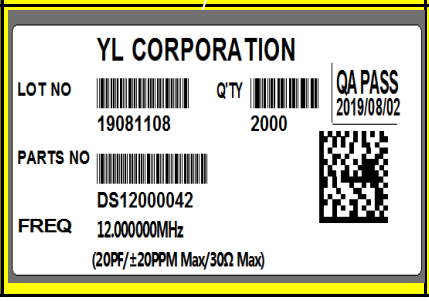	

The label instruction

Label Drawing	Mark	Name of Article	Spec.	Size	Printing
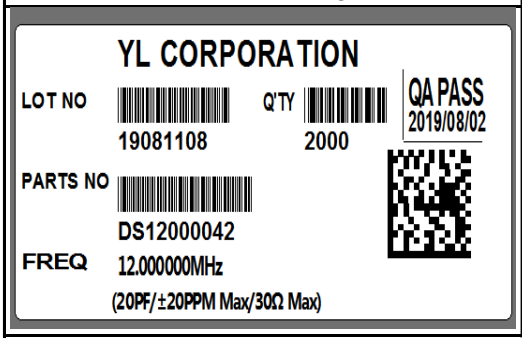	L1	条码标签 Bar Code Label (Chintz Paper)	1.Date Code 2.Lot No. 3.Part No. 4.Freq 5.Q'ty	75x35mm	White

Remark

Specifications on the label is for the use of templates with different product specifications may vary.
If customer specified requirements for labels packaging. please provide the operation procedure.

Range	Products	Packing Material
Banned Substances	**Maximum concentration ppm(mg/kg)**	**Maximum concentration ppm(mg/kg)**
1.镉及镉化合物 Cadmium and cadmium compounds	100	100
2.铅及铅化合物 Lead and lead compounds	1000	100
3.汞及汞化合物 Mercury and mercury compounds	1000	100
4.六价铬化合物 Hexavalent-Chromium VI (Cr+6)	1000	100
5.聚溴联苯 PBB Polybrominated biphenyls	1000	N/A
6.聚溴二苯醚 PBDE Polybrominated diphenyl ethers	1000	N/A
7.邻苯二甲酸二(2-乙基己基)酯 DEHP Di (2-ethylhexyl) phthalate	1000	N/A
8.邻苯二甲酸丁苄酯 BBP Butyl Benzyl Phthalate	1000	N/A
9.邻苯二甲酸二丁酯 DBP Dibutyl Phthalate	1000	N/A
10 邻苯二甲酸二异丁酯 DIBP Diisobutyl Phthalate	1000	N/A
11. 氟（F）、氯（Cl）、溴（Br）、碘（I） Fluorine、Chlorine、 Bromine、Iodine	900、900、900、900 注：Br+Cl＜1000	N/A
12.包装材料中重金属(汞、镉、六价铬、铅、PBB、PBDE)之总量 Heavy metals (mercury, cadmium, lead, Cr+6,PBB and PBDE) in packing materials	N/A	100 铅(Pb) + 镉(Cd) + 汞(Hg) + 六价铬(Cr+6) <100ppm
13.高度关注物质 SVHC-Substances of Very High Concern	1000	N/A


惠伦晶体
FAILONG CRYSTAL