广东惠伦晶体科技股份有限公司
GUANGDONG FAILONG CRYSTAL TECHNOLOGY Co.,Ltd.
36 Donghuan Road,Jitigang Village,Huangjiang,Dongguan,Guangdong Province,P.R.China
TEL :+86(0)769-38879888 Fax :+86(0)769-38879889 E-mail : yl@dgylec.com

PRODUCT SPECIFICATION SHEET

CUSTOMER	:	
PRODUCT TYPE	:	HC-49S
NOMINAL FREQ.	:	4.000000 MHz
FL P/N	:	DS04000049
REVISION	:	A0
CUSTOMER P/N	:	

CUSTOMER'S APPROVAL&DATE

FL CORPORATION

APPROVED	CHECKED	DESIGNED
Antian KeShi	Luo Jinsong	Zhai XueLing

RoHS Compliant

CONTENTS **PAGE**

- SPECIFICATION REVISION RECORD SHEET 2
- ELECTRICAL SPECIFICATIONS 3
- DIMENSIONS & MARKING 4
- STRUCTURE ILLUSTRATION 5
- RELIABILITY TEST SPECIFICATIONS 6
- PACKAGING REQUIREMENT 7/8
- SPECIFICATION OF THE ENVIRONMENT-RELATED SUBSTANCES 9

ATTACHMENT（optional）

- ELECTRICAL CHARACTERISTICS TEST A ☐ YES ☑ NO
- TEMPERATURE CHARACTERISTICS TEST B ☐ YES ☑ NO

SPECIFICATION REVISION RECORD SHEET

Rev.	Revise page	Revise Contents	Date	Ref. No.	Reviser
A0	N/A	Initial released	19-Sep-19	N/A	Chen XuanRu

PRODUCT DESCRIPION

Standard atmospheric conditions

Unless otherwise specified. The standard range of atmospheric conditions for making measurement and tests are as follow:

Ambient temperature 25±2℃
Relative humidity 40%~70%

If there is no doubt the results, measurement shall be made within the following limits:

Ambient temperature 25±2℃
Relative humidity : 40%~70%

Measure equipment

Electrical characteristics measured by S&A250B or equivalent.

Crystal cutting type

The crystal is using AT CUT (thickness shear mode)

ELECTRICAL SPECIFICATIONS

	Parameters	Symbol	Electrical Spec.	UNITS	Notes
1	Nominal Frequency	FL	4.000000	MHz	-
2	Oscillation Mode	-	Fund	-	-
3	Load Capacitance	CL	12.0	p F	-
4	Frequency Tolerance	-	+/-30	ppm	at 25±2℃
5	Operating Temperature	-	-40～+125℃	℃	-
6	Frequency Stability (reference 25℃)	-	+/-150	ppm	-40～+125℃
7	Drive Level	DL	100.0	u W	-
8	Effective Resistance Rr	ESR	< 80.0	ohm	-
9	Shunt Capaitance C0	C0	3	p F	-
10	Insulation Resistance	IR	>500	M-ohm	at DC 100V
11	Aging	-	+/-5	ppm	1st Year
12	Reflow shift	-	+/-5	ppm	at 265±2℃*10sec
13	Storage Temperature Range	-	-40～+125℃	℃	-
14	ESD	-	HBM>2000V	℃	JESD22-A114-B
15	Others	-	-	-	-

DIMENSIONS UNITS: MM

49S MODE

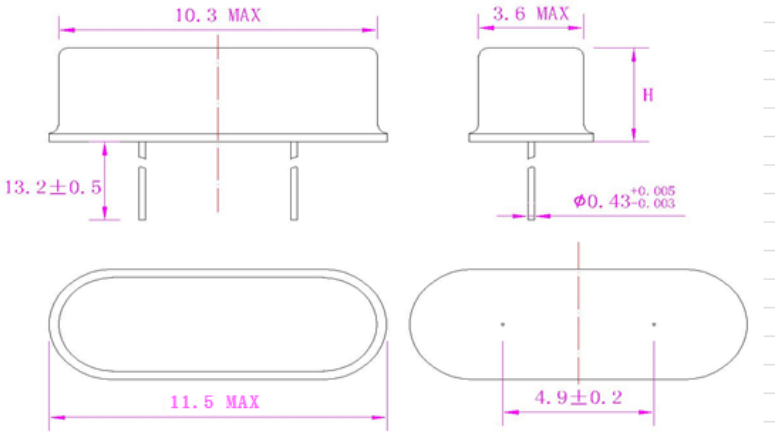

OPTION	HOLDER	H
■	49S	3.3±0.3 mm
□	49SS	2.3±0.3 mm

49SMD MODE

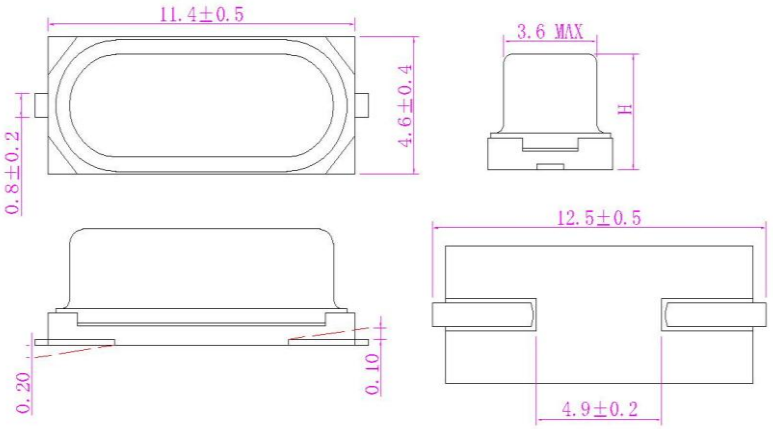

OPTION	HOLDER	H
□	SMD-49S	4.1±0.3 mm
□	SMD-49SS	3.1±0.3 mm

MARKING

YL
XXXX D G KK

XXXX：Frequency
D：Company code（Y）
G：Year month code
KK：Lot No.

month / year		JAN	FEB	MAR	APR	MAY	JUN	JUL	AUG	SEP	OCT	NOV	DEC
2013	2017	A	B	C	D	E	F	G	H	J	K	L	M
2014	2018	N	P	Q	R	S	T	U	V	W	X	Y	Z
2015	2019	a	b	c	d	e	f	g	h	j	k	l	m
2016	2020	n	p	q	r	s	t	u	v	w	x	y	z

SUGGESTED REFLOW PROFILE

Total time : 200 sec. Max.

Solder melting point :185 °C

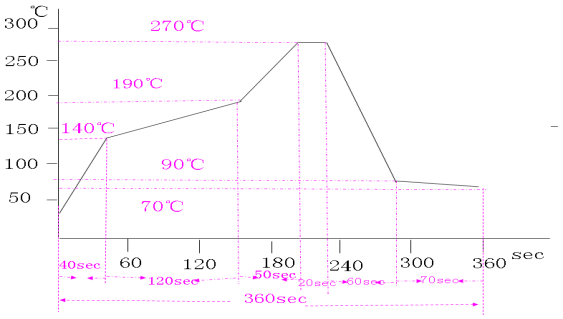

STRUCTURE ILLUSTRATION

49S/49SMD MODE

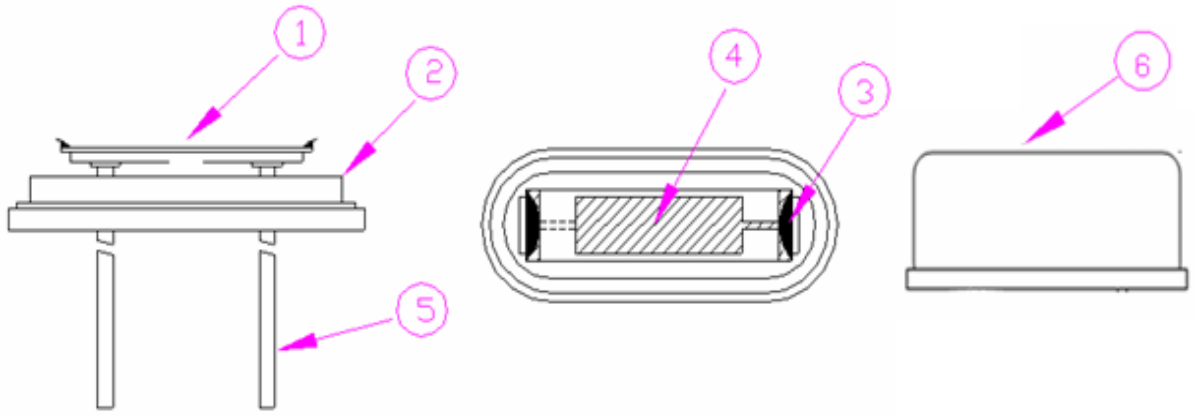

49M MODE

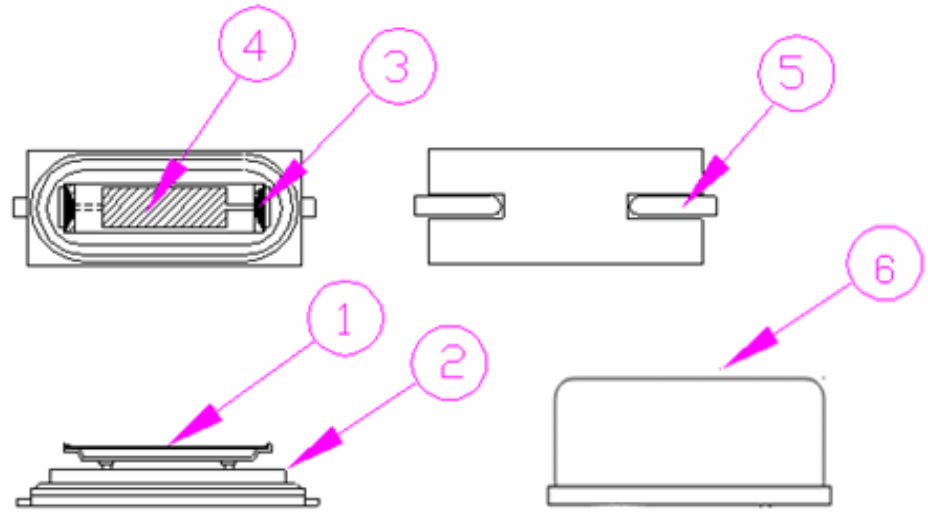

NO	COMPONENTS	MATERIALS	QTY	FINISH/SPECIFICATIONS
1	CRYSTAL BLANK	SiO2	1	-
2	BASE	SPCC-SD	1	-
3	ONDUCTIVE ADHESIV	Ag +Resin	2	-
4	ELECTRODE	Noble metal	2	-
5	LEAD	Kovar	2	-
6	COVER/CAN	Kovar	1	

RELIABILITY SPECIFICATIONS

1.MECHANICAL ENDURANCE

No.	Test Item	Test Methods		
1	Drop Test	50 cm height, fall freely onto stainless plate 3 times.		JIS C6701
2	Vibration	Frequency range Amplitude Sweep time Pendicular axes each test time	10 ~ 2000 Hz 1.52 mm 20 minute 4 hours (Total test time 12 hours)	MIL-STD-883E
3	Solderability	Temperature Immersing depth Immersion time Flux	255 °C +/- 5 °C 0.5 mm minimum 10 +/- 0.5 seconds Rosin resin methyl alcohol solvent (1 : 4)	MIL-STD-883E
4	Resistance To Soldering Heat	Pre-heat temperature Pre-heat time Test temperature Test time	125 °C 60 ~ 120 sec. 260 +/- 5 °C 5 +/- 1 sec.	MIL-STD-202F

2.ENVIRONMENTAL ENDURANCE

No.	Test Item	Test Methods	
5	High Temp. Storage	+ 125 °C +/- 2 °C for 500 +/- 12 hours	MIL-STD-883E
6	Low Temp. Storage	- 40 °C +/- 2 °C for 500 +/- 12 hours	
7	Thermal Shock	Total 10 cycles of the following temperature cycle 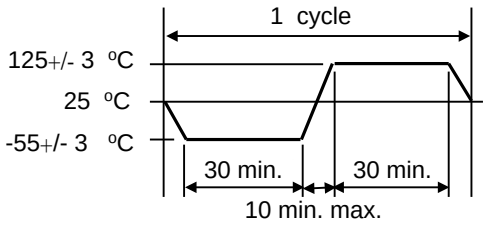	MIL-STD-883E

PACKING :

49S/49SMD MODE

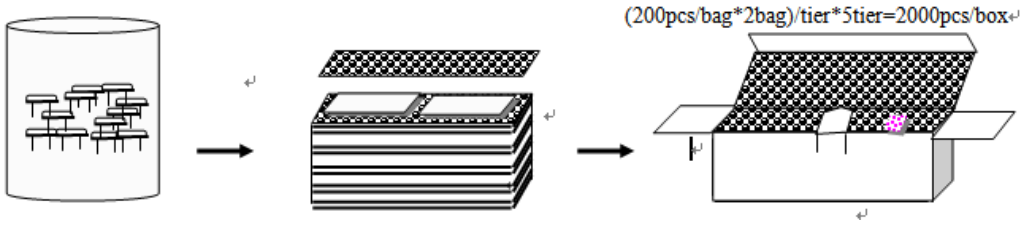

49M MODE

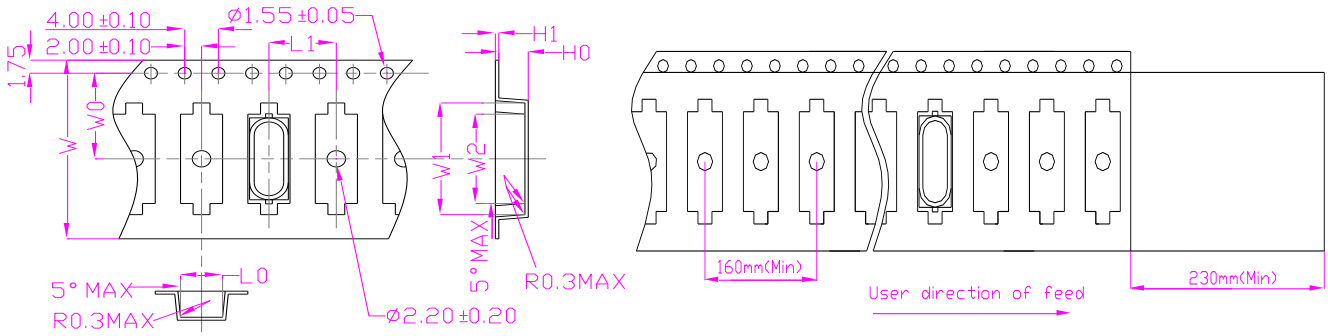

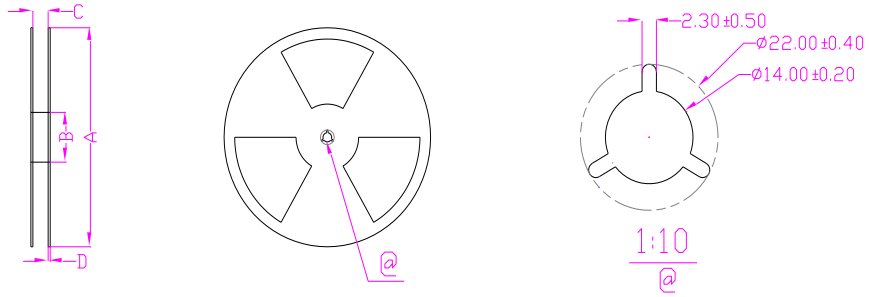

Type \ Dimension	Unit : mm						
	W	**W0**	**W1**	**W2**	**L0**	**L1**	**H0**
SMD-49S	24±0.3	11.5±0.1	15±0.1	12±0.1	5±0.1	8/12±0.1	0.4±0.05
	H1	**A**	**B**	**C**	**D**		
	4.25/3.5±0.2	330±2.0	100±1.0	24.5±1.0	2.4±0.2		

Standard Reel Quantity is 1,000 pcs per reel.

REMARK : NA

SMD PRODUCT PACKING STANDARD

Out-going packing instruction

Reel Packing	Inner Packing	Carton
name：reel standard：diameter 18cm material：plastics	name：inner box standard：L19.0xW19.0xH2.5cm material：B corrugated paper	name：carton standard：L34.0xW22.0xH22.0cm material：AB corrugated paper(10 boxes enter)
	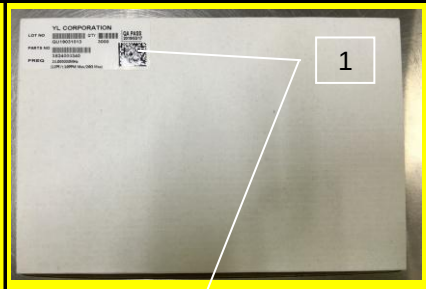	
	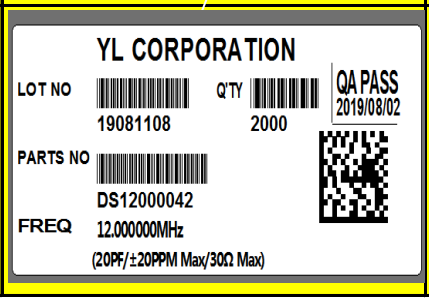	

The label instruction

Label Drawing	Mark	Name of Article	Spec.	Size	Printing
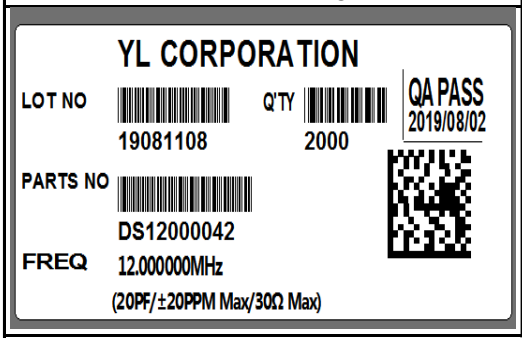	L1	条码标签 Bar Code Label (Chintz Paper)	1.Date Code 2.Lot No. 3.Part No. 4.Freq 5.Q'ty	75x35mm	White

Remark

Specifications on the label is for the use of templates with different product specifications may vary.
If customer specified requirements for labels packaging. please provide the operation procedure.

Range	Products	Packing Material	Test Method
Banned Substances	**Maximum concentration ppm(mg/kg)**	**Maximum concentration ppm(mg/kg)**	
1.镉及镉化合物 Cadmium and cadmium compounds	5	5	ICP-AES as per EN1122, method B2001 or other acid digestion.
2.铅及铅化合物 Lead and lead compounds	40	100	ICP-AES after as per EPA 3050B or other acid digestion.
3.汞及汞化合物 Mercury and mercury compounds	5	5	ICP-AES after as per EPA 3052 or other acid digestion.
4.六价铬化合物 Hexavalent-Chromium VI (Cr+6)	10	10	As per US EPA 7196A and US EPA 3060A.
5.聚溴联苯 PBB Polybrominated biphenyls	5	5	With reference to USEPA 3540 or USEPA3550. Analysis was performed by LPLC/DAD, LC/MS or GC/MS. (prohibited by 2002/95/EC (RoHS),83/261/EEC, and76/769/EEC)
6.聚溴二苯醚 PBDE Polybrominated diphenyl ethers	5	5	With reference to USEPA3540or USEPA3550. Analysis was performed by HPLC/DAD LC/MS or GC/MS.(prohibited by 2002/95/EC(RoHS), 83/264/EEC, and 76/769/EEC)
7.多氯联苯 (PCB) Polychlorinated biphenyl	5	5	
8.多氯化萘 (PCN) Polychlorinated naphthalene	5	5	
9.氯代烷烃 (CP) Chiorinated paraffin	5	5	
10.其他有机氯化合物 Other chlorinated organic compounds	5	5	
11.其他有机溴化合物 Other brominated organic compounds	5	5	
12.有机锡化合物 (三丁基锡化合物,三苯基锡化合物) Organic tin compounds (Tributyl tin category & Triphenyl tin category)	5	5	
13.石棉 Asbestos	5	5	
14.偶氮化合物 Azo compounds	5	5	
15.甲醛 Formaldehyde	5	5	
16.聚氯乙烯(PVC)以及聚氯乙烯混合物 Polyvinyl chloride (PVC) and PVC blends	No detect	No detect	
17.包装材料中重金属(汞、镉、六价铬、铅、PBB、PBDE)之总量 Heavy metals (mercury, cadmium, lead, Cr+6,PBB and PBDE) in packing	N/A	<100	

Lead Free Products are “Directive 2002/95/EC of The European Parliament of 27 January 2003 on the restriction of certain hazardous substances (RoHS) in electrical and electronic equipment” and Sony SS-00259 Compliant.


惠伦晶体
FAILONG CRYSTAL