RECIPIENT

SPECIFICATIONS

Product No. : **Q3806CA00032400**

MODEL : **EG-2102CA**

SPEC. No. :

DATE: **Apr. 13. 2015**

SEIKO EPSON CORPORATION

8548 Naka-minowa
Minowa-machi Kamiina-gun
Nagano-ken
399-4696 Japan

CHECKED _____ / TD･CS Quality Assurance Department Manager
Yasushi Hiraizumi

PREPARED _____ / TD･CS Quality Assurance Department Senior Staff
Takashi kurumizawa

SPECIFICATIONS

1. Application

This document is applicable to the saw (surface acoustic wave) oscillator that are delivered to SHENZHEN MINDRAY BIO-MEDICAL ELECTRONICS CO LTD from Seiko Epson Corp.

This product is compliant with RoHS Directive.

This Product supplied (and any technical information furnished, if any) by Seiko Epson Corporation shall not be used for the development and manufacture of weapon of mass destruction or for other military purposes. Making available such products and technology to any third party who may use such products or technologies for the said purposes are also prohibited.

This product listed here is designed as components or parts for electronics equipment in general consumer use. We do not expect that any of these products would be incorporated or otherwise used as a component or part for the equipment, which requires an extra high reliability, such as satellite, rocket and other space systems, and medical equipment, the functional purpose of which is to keep life.

2. Product No. / Model

The product No. of this crystal clock oscillator's is Q3806CA00032400.
The model is EG-2102CA PGRN

3. Packing

It is subject to the packing standard of Seiko Epson Corp.

4. Warranty

Defective parts which are originated by us are replaced free of charge in case defects are found within 12 months after delivery.

5. Amendment and abolishment

Amendment and/or abolishment of this specification are subject to the agreement between both parties.

6. Contents

Item No.	Item	Page
[1]	Absolute maximum ratings	2
[2]	Operating range	2
[3]	Frequency characteristics	2
[4]	Pin map	2
[5]	Electrical characteristics	3
[6]	Test circuit	4
[7]	Timing chart	5
[8]	Environmental and mechanical characteristics	6
[9]	Electrostatic discharge (ESD) sensitivity	7
[10]	Dimensions and marking layout	7
[11]	Board patterning	8,9,10
[12]	Notes	11

[1] Absolute maximum ratings

Item	Symbol	Specifications	Unit	Remarks
Supply voltage	Vcc-GND	-0.5 ~ +7.0	V	
Storage temperature *1	T_stg	-40 ~ +100	°C	Stored as bare product after unpacking
Input voltage	V_{IN}	-0.5 ~ Vcc+0.5	V	

*1 Concerning the frequency change, please see [8] Environmental and mechanical characteristics.

[2] Operating range

Item	Symbol	Specifications			Unit	Remarks
		Min.	Typ.	Max.		
Supply voltage *1	Vcc	3.0	3.3	3.6	V	
Supply voltage	GND	0.0	0.0	0.0	V	
Input voltage	V_{IN}	GND	-	Vcc	V	
Operating temperature range *2	T_use	-5	-	+85	°C	PGRN
Output load condition	L_PECL	50			Ω	Terminated to Vcc-2 V

*1 Start up time (Vcc=0 V→90 %Vcc) of power source should be more than 150 μs and slew rate should be less than 19.8 mV/μs.

*2 Operating temperature means DUT's surface temperature.

[3] Frequency characteristics

Output frequency: 160.0000 [MHz]

[GND=0.0 V]

Item	Symbol	Specifications [1×10^{-6}]	Remarks
Frequency tolerance *1	f_tol	±50	Under T_use range
Frequency aging	f_age	±10	Vcc=3.3 V, T_use=+25 °C, 1st year

*1 This includes initial frequency tolerance, frequency/temperature coefficient, frequency/voltage coefficient, and reflow drift,

[4] Pin map

Top View

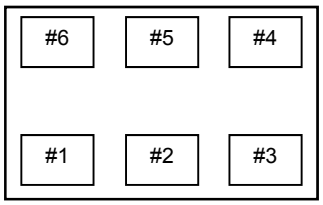

Connection	No.	Type	Remarks
OE	1	INPUT	Output enable pin. As per below table. Input level / Oscillation / Outputs "H" / Enable / Enable : specified frequency "L" / Enable / Disable : Hi-Z
N.C.	2	-	Non connect
GND	3	-	GND pin
OUT	4	OUTPUT	Output pin
$\overline{OUT}$	5	OUTPUT	Output pin, inversion of #4
Vcc	6	-	Vcc pin

* The metal part of the surface (metal cap) is connected to GND #3 pin.

[5] Electrical characteristics

[Please see [2]]

Item	Symbol	Specifications		Unit	Remarks	
		Min.	Max.			
Oscillation start up time	t_str	-	10	ms	t=0 at Vcc Min.	
Current consumption	Icc	-	100	mA	OE=Vcc, L_PECL=50 Ω	
		-	75		No load	
Disable current	I_dis	-	32	mA	OE=GND	
Rise time *1	tr	-	400	ps	20 % → 80 % of (V_{OH}-V_{OL})	
Fall time *1	tf	-	400	ps	80 % → 20 % of (V_{OH}-V_{OL})	
Symmetry *1	SYM	45	55	%	at outputs crossing point	
High output voltage	V_{OH}	Vcc-1.03	Vcc-0.88	V	T_use=0 ~ +85 °C	DC characteristics
		Vcc-1.09			T_use=-20 ~ +0 °C	
Low output voltage	V_{OL}	Vcc-1.81	Vcc-1.62	V	T_use=0 ~ +85 °C	DC characteristics
		Vcc-1.83	Vcc-1.56		T_use=-20 ~ +0 °C	
High input voltage	V_{IH}	70 %Vcc	Vcc+0.3	V	OE terminal	
Low Input voltage	V_{IL}	-0.3	30 %Vcc	V	OE terminal	
Input current	I_{IH}	-200	-20	μA	V_{IN}=70 %Vcc	
	I_{IL}	-20	-2	μA	V_{IN}=GND	
Disable delay time *2	t_{pxz}	-	100	ns	OE terminal HIGH → LOW	
Enable delay time *2	t_{pzx}	-	100	ns	OE terminal LOW → HIGH	
Phase jitter *3	t_{PJ}	-	0.8	ps	f0 < 100 MHz	
		-	0.5		100 MHz ≤ f0 < 200 MHz	
		-	0.3		f0 ≥ 200 MHz	

Please see [6] Test circuit.

*1 Please see [7] 1) Output waveform.

*2 Please see [7] 2) OE function and timing.

*3 Offset frequency 12 kHz ~ 20 MHz

*Reference value

Item	Symbol	Typ.	Unit	Remarks
Jitter *3	t_{DJ}	0.2	ps	Deterministic Jitter
	t_{RJ}	3	ps	Random Jitter
	t_{RMS}	3	ps	σ (RMS of total distribution)
	t_{p-p}	25	ps	Peak to Peak
	t_{acc}	4	ps	Accumulated Jitter (σ) n=2 ~ 50 000 cycles

*3 Based on DTS-2075 Digital timing system made from WAVECREST with jitter analysis software VISI6.
These are not specifications, only typical values.
These may be different from the values that are gotten by measurement systems except the above.

[6] Test circuit

1) To observe waveform and current (case 1)

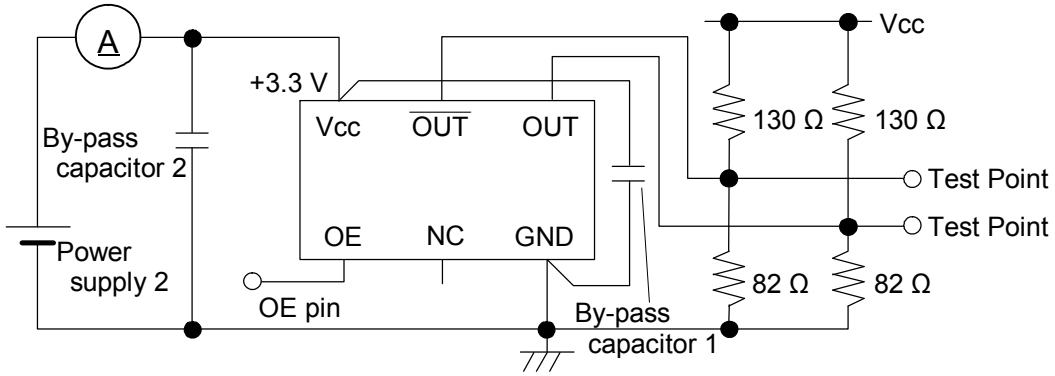

* The lines from OUT and $\overline{OUT}$ pin are same length.
* To measure the disable current, OE pin is connected to GND
* Please see [7] 2) OE function and timing about OE pin.

2) To observe waveform and current (case 2)

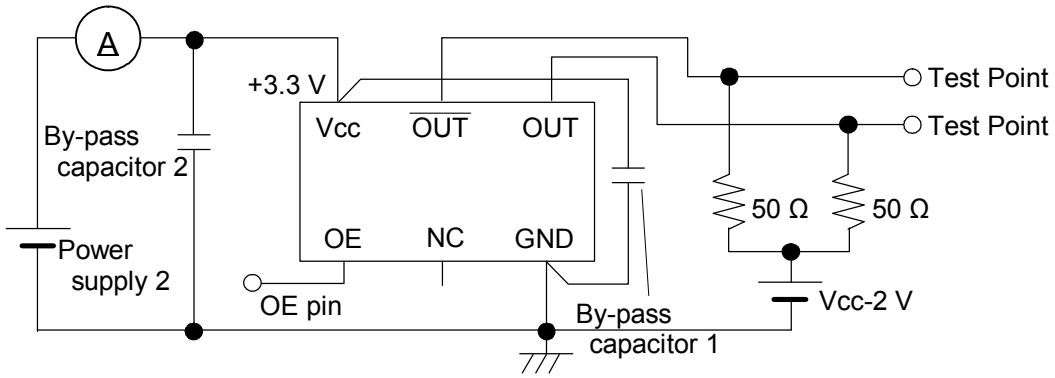

* The lines from OUT and $\overline{OUT}$ pin are same length.
* To measure the disable current, OE pin is connected to GND
* Please see [7] 2) OE function and timing about OE pin.

3) Measurement condition

(1) Oscilloscope
- Bandwidth should be 5 times higher than DUT's output frequency (4 GHz).
- Probe ground should be placed closely from test point and lead length should be as short as possible.

(2) By-pass capacitor 1 (approx. 0.01 µF to 0.1 µF) places closely between Vcc and GND.

(3) By-pass capacitor 2 (approx. 10 µF) places closely between power supply terminals on the board.

(4) Use the current meter whose internal impedance value is small.

(5) Power supply
- Start up time (0 V→90 %Vcc) of power source should be more than 150 µs and slew rate should be less than 19.8 mV/µs.
- Impedance of power supply should be as low as possible.

[7] Timing chart

1) Output waveform

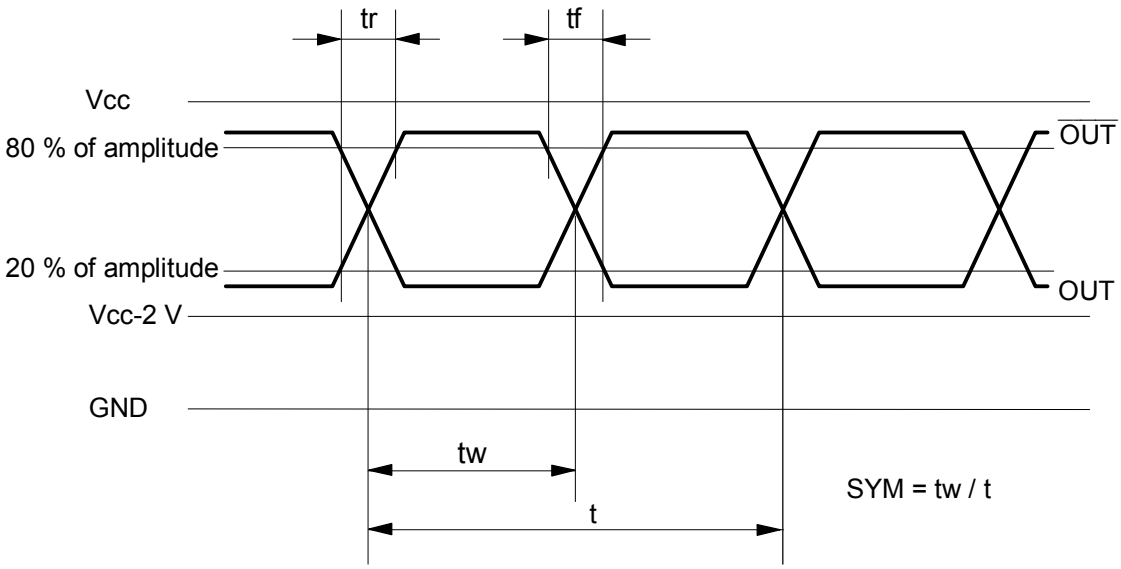

2) OE function and timing

OE input level	Oscillation	Outputs
“H”	Enable	Enable : specified frequency
“L”	Enable	Disable : high impedance

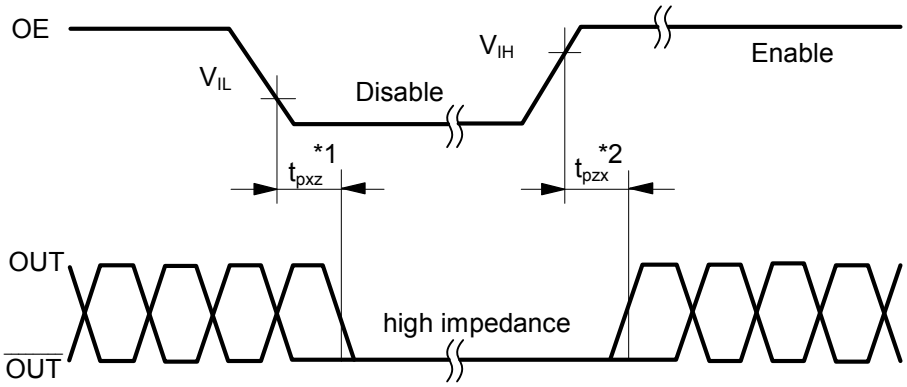

*1 The time taken from OE=V_{IL} to OUT/$\overline{OUT}$=Disable (high impedance).

*2 The time taken from OE=V_{IH} to OUT/$\overline{OUT}$=Enable.

* OE input voltage must be lower than Vcc. Note that rise-up time of OE input voltage must not be shorter than the rise-up time of supply voltage.

[8] Environmental and mechanical characteristics

* Seiko Epson evaluation condition: Evaluated by the following examination items and conditions.

No	Item	Specifications *1		Test condition
		Frequency tolerance *2 [1×10^{-6}]	Electrical characteristics	
1	High temperature storage *3	±30	Satisfy [5] Electrical characteristics specification after test	+100 °C × 1 000 h
2	Low temperature storage *3	±30		-40 °C × 1 000 h
3	High temperature bias *3	±20		+85 °C × 3.6 V × 1 000 h
4	Low temperature bias *3	±20		-20 °C × 3.6 V × 1 000 h
5	Temperature humidity bias *3	±20		+85 °C × 85 %RH × 3.6 V × 1 000 h
6	Temperature cycle *3	±20		-40 °C ⇔ +100 °C 30 min.at each temperature × 100 cycles
7	Resistance to soldering heat	±10		Convection reflow soldering profile Ref. IPC/JEDEC J-STD-020C (3 times)
8	Drop	±20		Free drop from 750 mm height onto a hard wooden board 3 times (Board thickness more than 30 mm)
9	Vibration	±10		10 Hz to 55 Hz amplitude 0.75 mm 55 Hz to 500 Hz acceleration 98 m/s^2 10 Hz → 500 Hz → 10 Hz 15 min/cycle Logarithm sweep 6 h (2 h × 3 direction)
10	Leakage	1×10^{-9} Pa·m^3/s Max.		Test by Helium leak detector
11	Solderability	More than 95 % of surface is covered by new solder		Dip pins into solder bath at +235 °C±5 °C for 5s (Using rosin flux)
12	Pull-off	No peeling-off at a solder part		Press 10 N × 10 s±1 s Ref. EIAJ ED-4702
13	Solvent resistance	The marking shall be legible		Ref. JIS C 0052 or IEC 60068-2-45

<Notes> *1 Each test is independent.
*2 Magnitude of the frequency change that is measured at 2 ~ 24 hours later after test.
*3 The test has been taken after pre-conditioning, and leaving for 24 hours at room temperature, then the initial value is measured.
Pre-conditioning: reflow 3 times (Same condition of Resistance to soldering heat test)

•Convection reflow profile (Ref. IPC/JEDEC J-STD-020C)

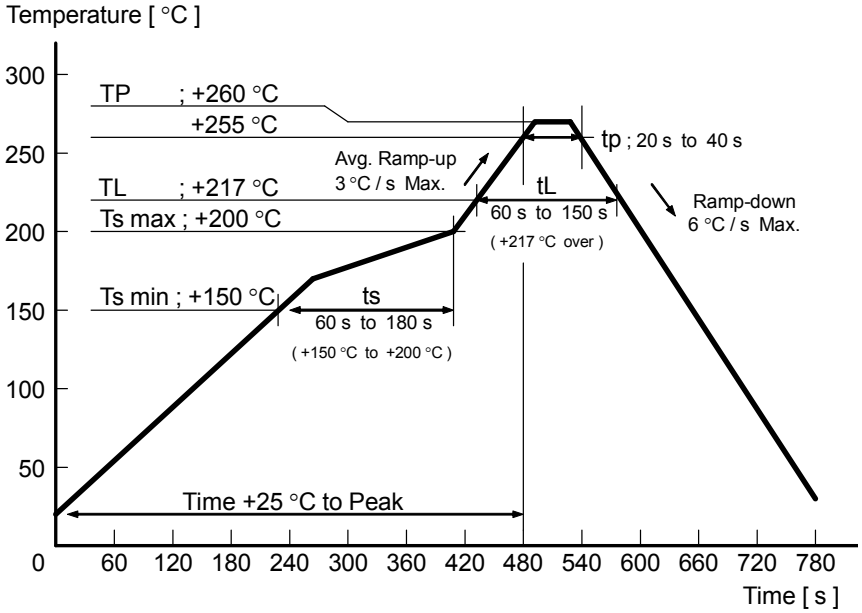

[9] Electrostatic discharge (ESD) sensitivity

Item	Sensitivity	Test condition
Human body model (HBM)	±2 000 V	IEC 60749-26 100 pF, 1.5 kΩ, 3 times
Machine model (MM)	±200 V	IEC 60749-27 200 pF, 0 Ω, 1 time

[10] Dimensions and marking layout

1) Dimensions

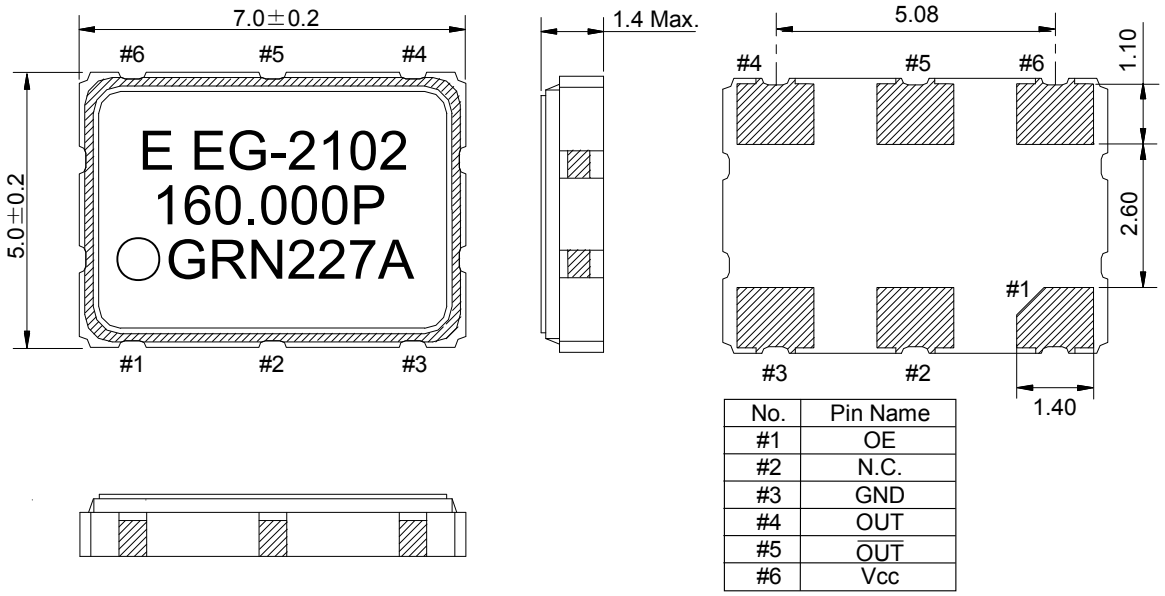

No.	Pin Name
#1	OE
#2	N.C.
#3	GND
#4	OUT
#5	$\overline{OUT}$
#6	Vcc

Pin coating : Au plating
Unit : mm

2) Marking layout

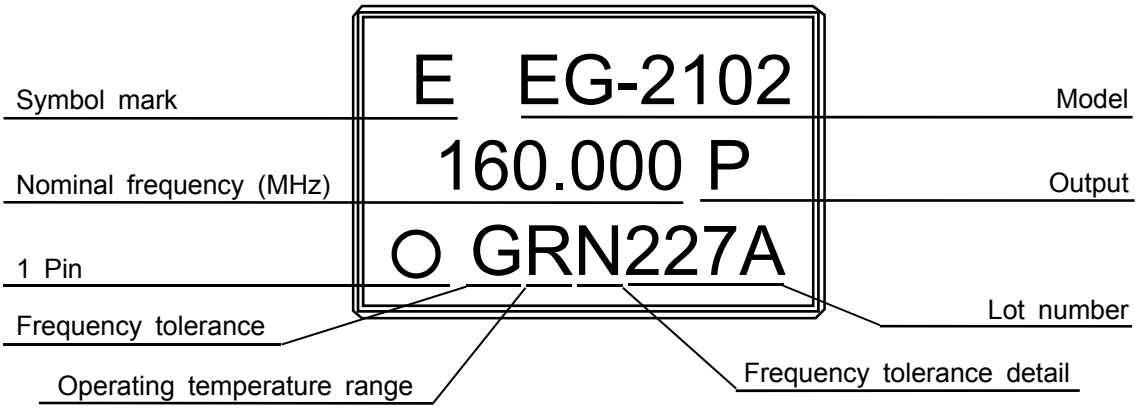

* The above marking layout shows only marking contents and their approximate position, not actual font, size and exact position.
* Nominal frequency omits the figure below the forth place of decimals.
* Nominal frequency shows as example.

[11] Board patterning

Example of patterning design indicated as follows. In an actual design, please consider mounting density, the reliability of soldering, etc. and check whether performance is optimal.

•Soldering pattern

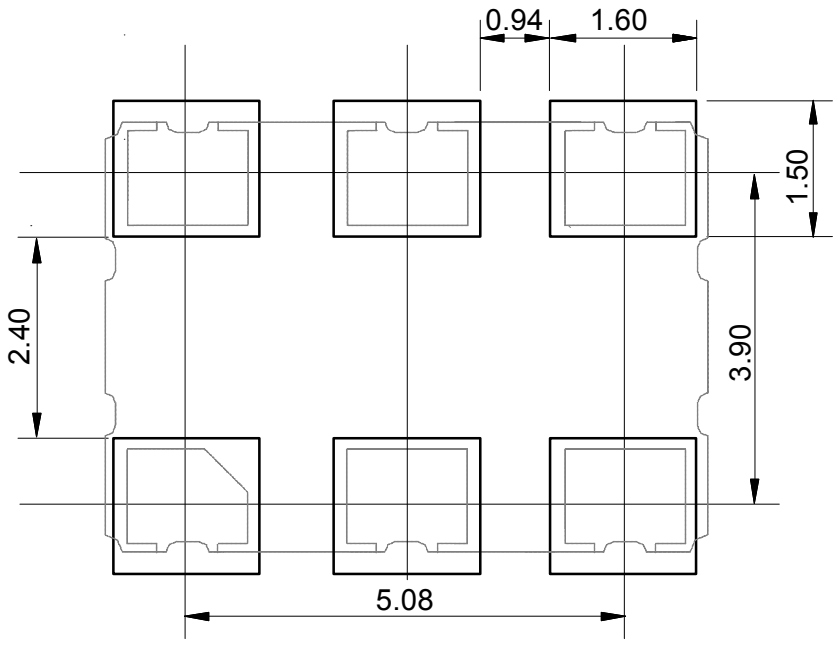

Unit : mm

• PCB layout (2 layers, 2nd layer is all GND pattern)

Case 1

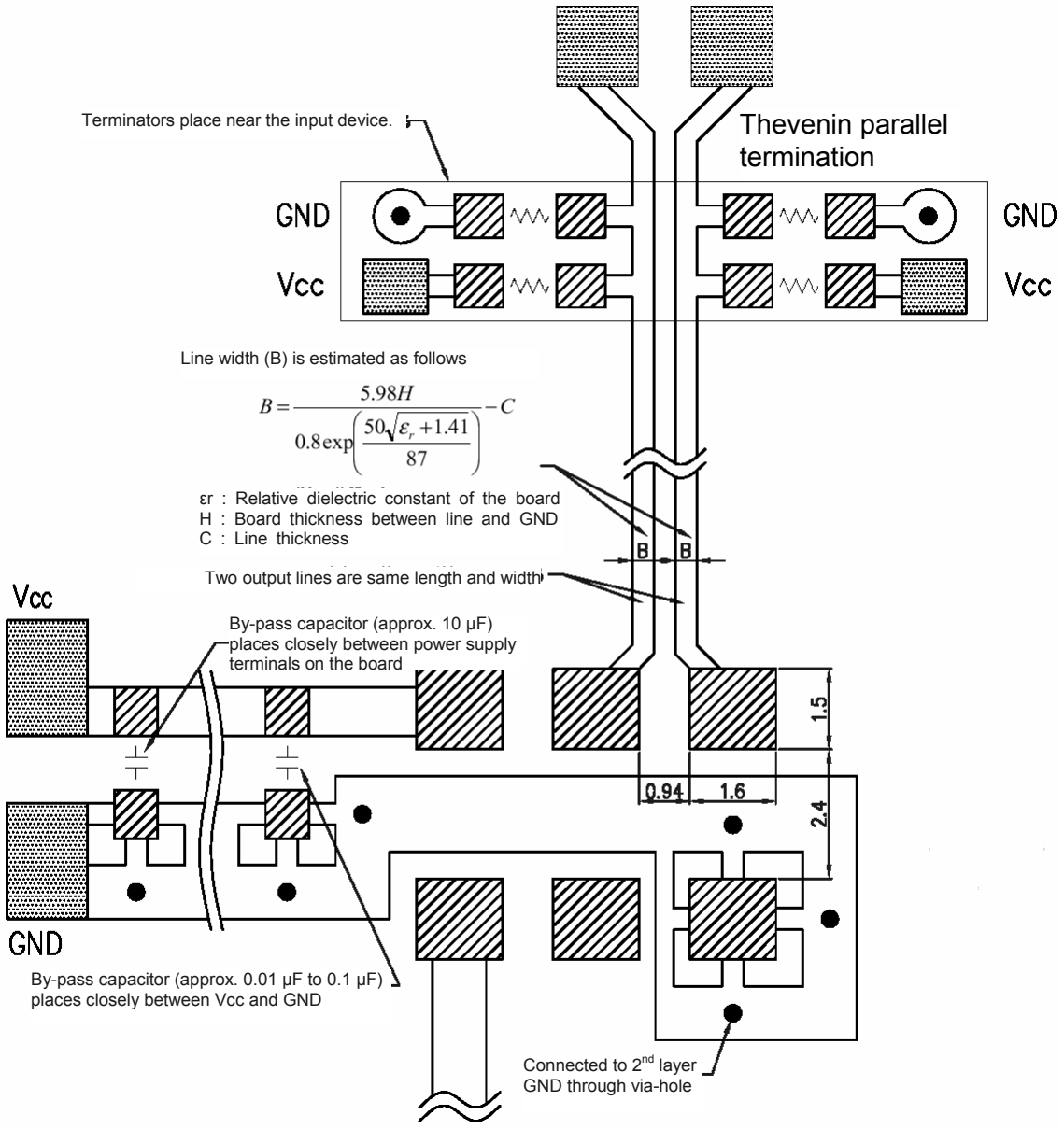

Case 2

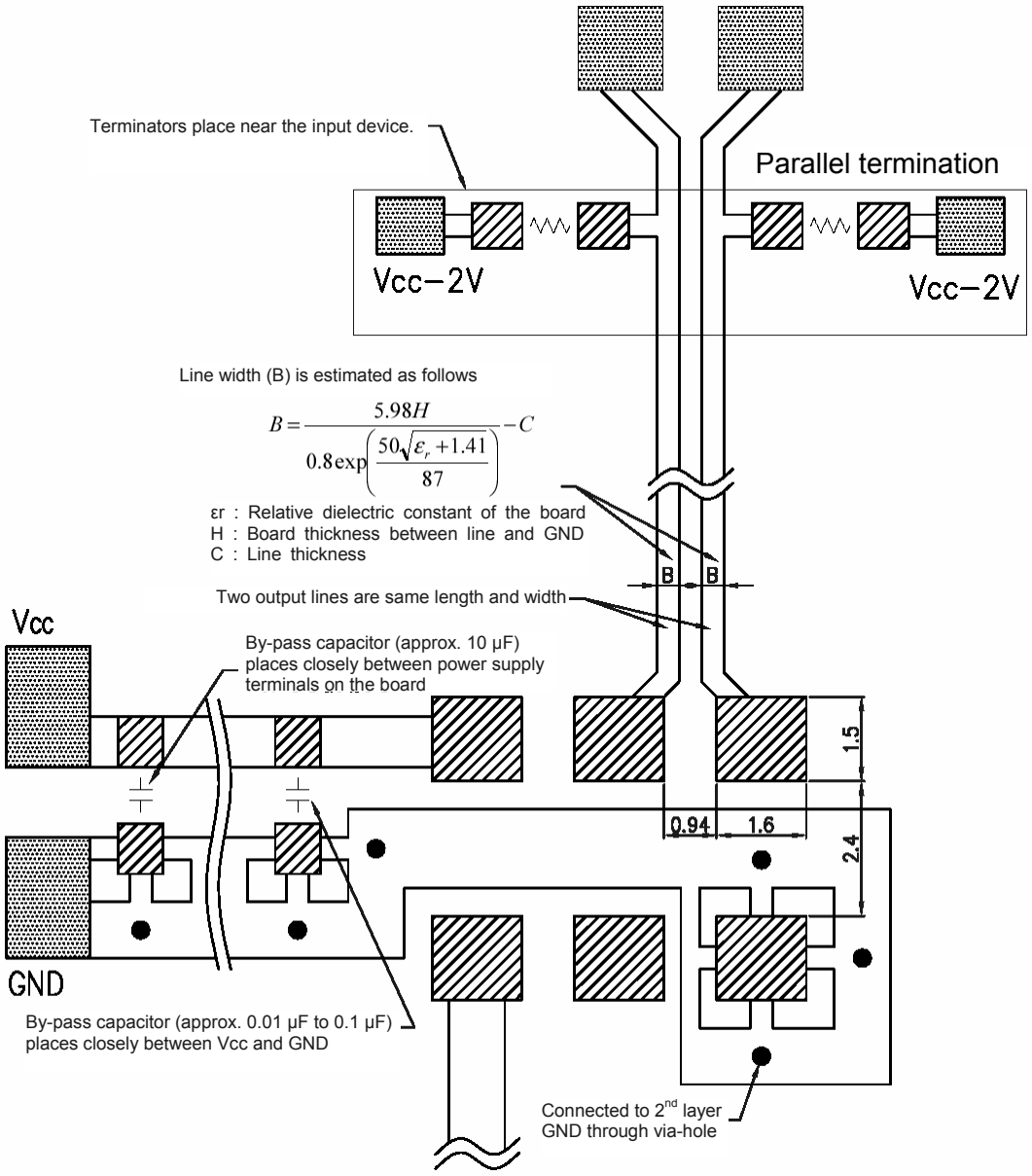

* By-pass capacitor (approx. 0.01 μF to 0.1 μF) places closely between Vcc and GND.
* By-pass capacitor (approx. 10 μF) places closely between power supply terminals on the board.
* Please design the two output lines by characteristic impedance 50 Ω and same length, and try to make the output lines as short as possible.
* Terminators place near the input device.

[12] Notes

1) This device contains a SAW resonator, so please do not expose to excessive shock or vibration.

2) Ultrasonic cleaning can be used on this product, however, since the oscillator might be damaged under some conditions, please exercise caution in advance.

3) An automatic insertion is available, however, the internal SAW resonator might be damaged in case that too much shock or vibration is produced mechanically.
Be sure to check your machine condition in advance.

4) This device is made with C-MOS IC.
Please take necessary precautions to prevent damage due to electrical static discharge.

5) We recommend placing a 0.01 μF to 0.1 μF capacitor closely between Vcc and GND to obtain stable operation and protest against power line ripple.

6) Vcc and GND pattern shall be as large as possible so that high frequency impedance shall be small.

7) The metal part of the surface (metal cap) is connected to GND #3 pin.
Please take necessary precautions to prevent short circuit to GND by contact with the metal cap.

8) Start up time (0 → 90% Vcc) of power source should be more than 150 μs and slew rate should be less than 19.8 mV/μs.
We doesn't recommend to power on from intermediate electric voltage or extreme fast power on.
Those powering conditions may cause no oscillation or abnormal oscillation.

9) Please design the output lines by characteristic impedance 50 Ω and try to make the output lines as short as possible.
A long output line may cause irregular output.

10) Other high level signal lines may cause incorrect operation, so please do not place high-level signal line close to this device.

11) We recommend to use and store under room temperature and normal humidity to secure frequency accuracy and prevent moisture.

12) When not use OE pin connection, please use connecting to Vcc.
We recommend installation of a resistor in between to mitigate effect by surge etc.

13) When distributing output signals, please use the clock divider IC (Differential LV-PECL fanout buffer).

14) Please arrange PECL terminal resistance with both outputs, even if only one output signal is used.

15) DUT's surface temperature may rise from surrounding temperature by self heat-generation. Please confirm a rise in temperature with DUT mounted to an actual substrate, because it may change from the mounting condition.

16) Recommendation reflow times are less than 2 times.
In case that this device is reflow soldered on the back side of your circuit board, please carefully verify the device is properly secured to prevent coming detached from card.

[About soldering method]

Soldering method	Good or No good
Reflow soldering (top side)	Good
Reflow soldering (back side)	Please carefully verify the device is properly secured to prevent coming detached from card.
Solder pot (static solder pot / flow solder pot)	No good
Iron soldering	Good

TAPING SPECIFICATION

I. Application

This document is applicable to EG-2***CA series , EG-1***CA series , EG-4***CA series , XG-2***CA series , XG-1000CA series, MG7050 series

II. Contents

Item No.	Item	Page
[1]	Taping specification	1 to 2
[2]	Inner carton	3
[3]	Shipping carton	
[4]	Marking	4
[5]	Quantity	
[6]	Storage environment	
[7]	Handling	

[1] Taping specification

Subject to「EIA-481」、「IEC-60286」、「JIS　C0806」

(1) Tape dimensions

Material of the carrier tape : PS conduct

Material of the top tape : PET

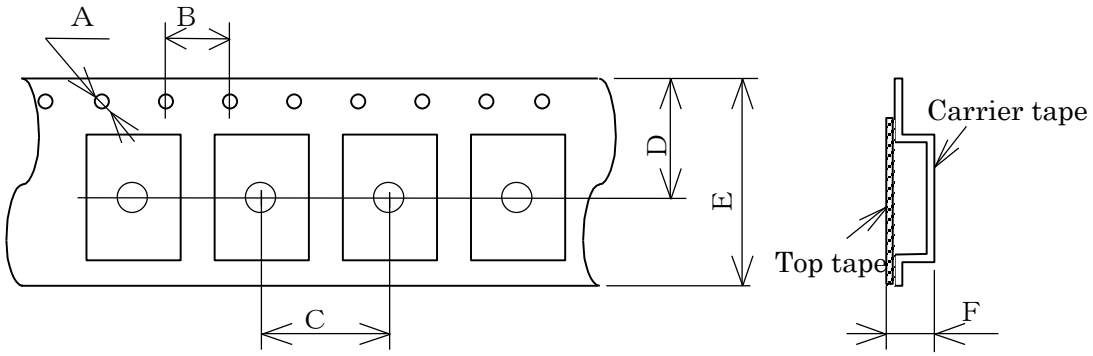

Symbol	A	B	C	D	E	F
Value	ϕ1.5	4.0	8.0	9.25	16.0	2.3

Unit : mm

(2) Reel dimensions

Material of the reel : Conductive polystyrene

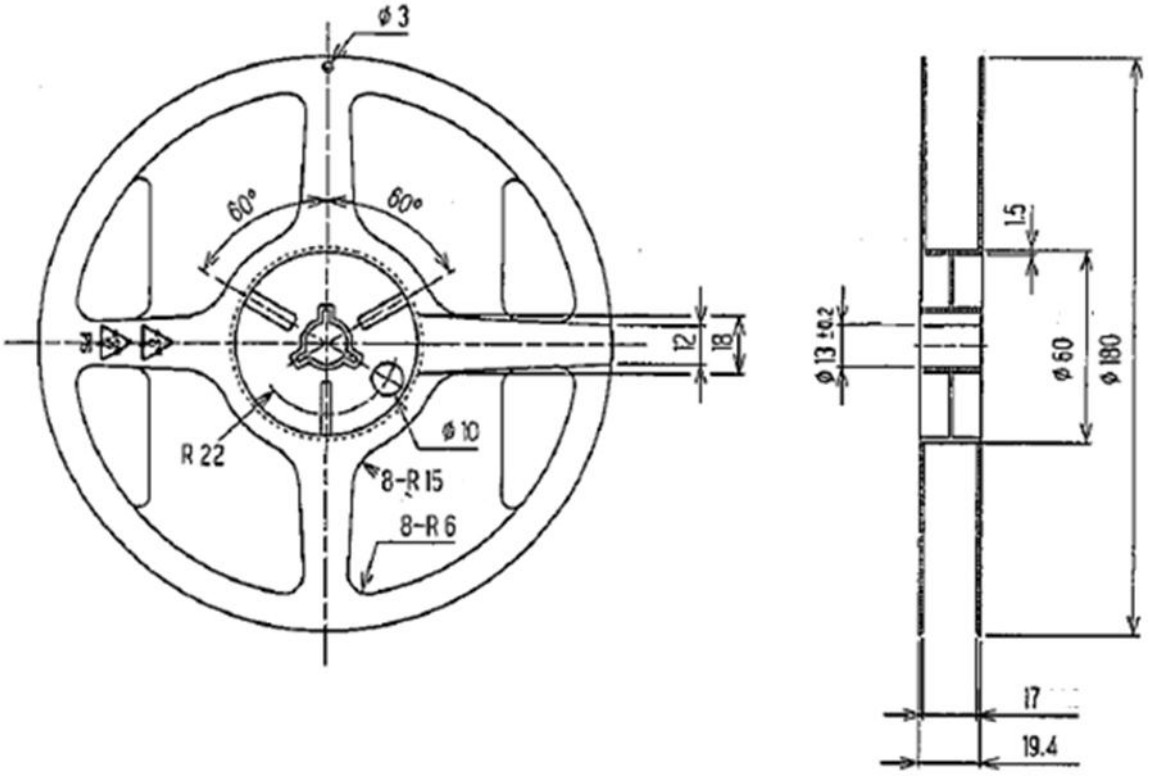

Form and Size of reel window shows are one of the example

(3) Packing

1) Tape & reel Tape type : L

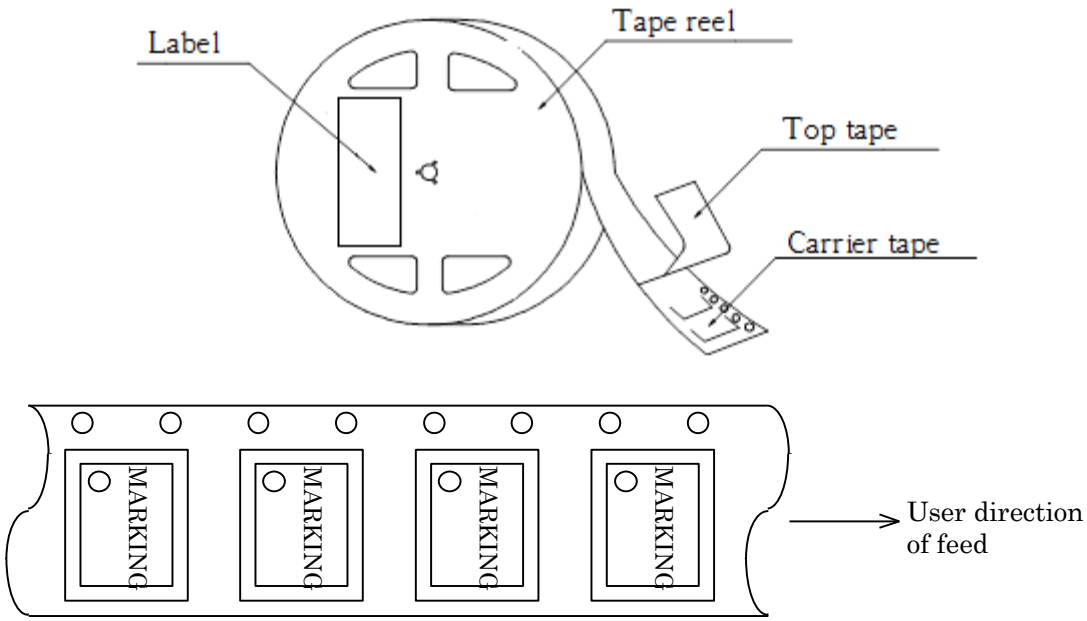

2) Start & end point

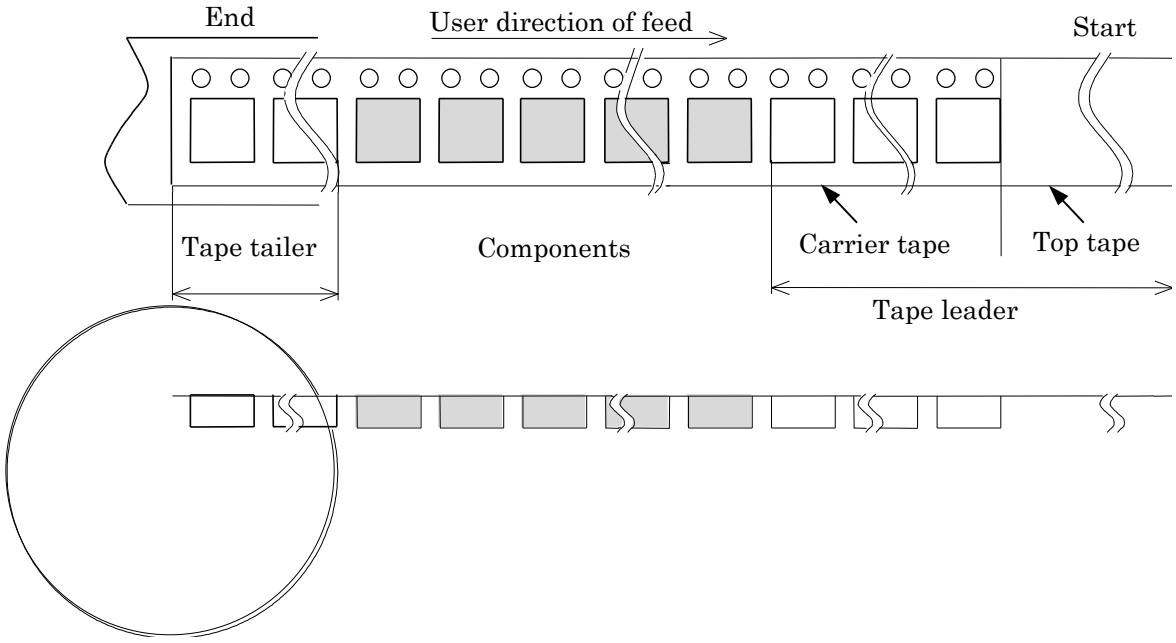

Item		Empty space
Tape leader	Top tape	Min. 1 000 mm
	Carrier tape	Min. 80 mm
Tape trailer	Top tape	Min. 0 mm
	Carrier tape	Min. 80 mm

[2] Inner sleeve

a) Packing to antistatic bag

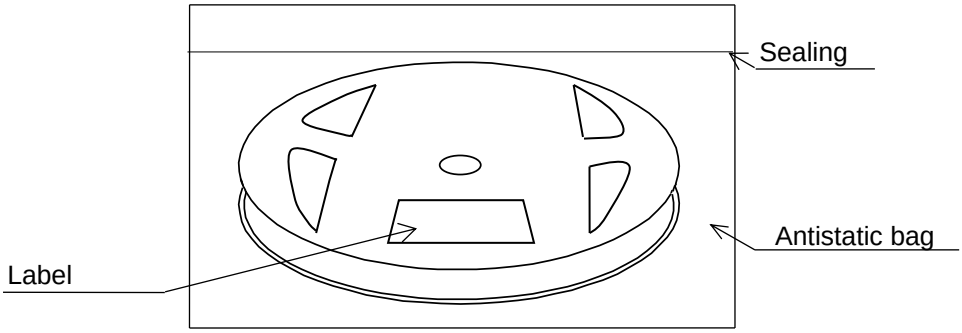

b) Packing to inner sleeve

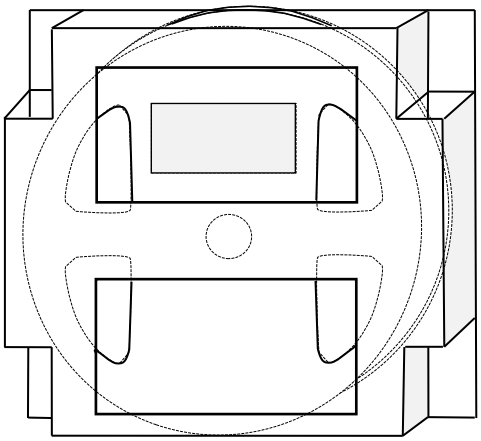

＊There is also a case to put the two reels.

[3] Shipping Carton

- Put inner sleeve into an outer box.
- If there are room in the outer box, material is put in a shock absorbing together.

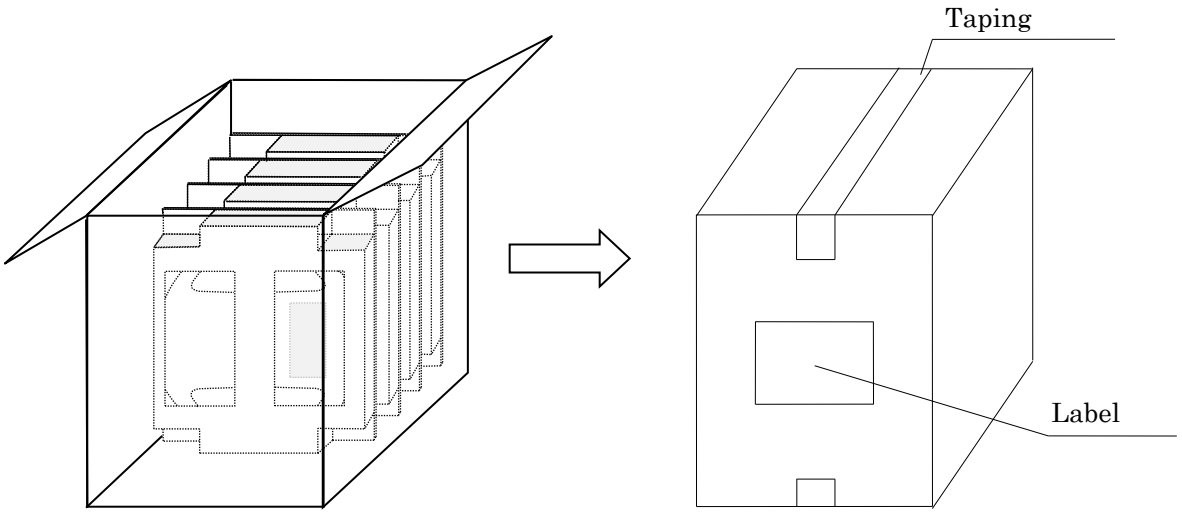

[4] Marking

(1) Reel marking

・Reel marking shall consist of :

1) Parts name
2) Quantity
3) Manufacturing date or symbol
4) Manufacturer's date or symbol
5) Others (if necessary)

(2) Shipping carton marking

・Shipping carton marking shall consist of :

1) Parts name
2) Quantity

[5] Quantity

・1 000 pcs./reel

[6] Storage environment

(1) To storage the reel at 15 °C to 35 °C , 25%RH to 85%RH of humidity.
(2) Not to expose the sun.
(3) Not to storage with some erosive chemicals.
(4) Nothing is allowed to put on the reel or carton to prevent mechanical damage.

[7] Handling

To handle with care to prevent the damage of tape, reel and products.

EG-2***CA PKG Process Quality Control

Seiko Epson Corp.
EG2xxxCA_Q_0001

Manufacturing Process Chart	Section In Charge	Standards	Inspection Control Item	Inspection Method	Instruments	Record
SAW Chip / Package/IC / 1 In-coming Inspection	Inspection	Purchasing Specification In-coming Inspection Standard	Appearance	Sampling Inspection	Microscope	Data sheet
			Dimension	Sampling Inspection	Micrometer,Dialgauge	Data sheet
2 **Die Attach**	Production	Manufacturing Instruction Sheet	Adhesive type	Each time	Label (Visual)	Data sheet
			Adhesive volume and appearance	Sampling Inspection	Microscope	Data sheet
			Mounting position accuracy	Sampling Inspection	Microscope	Data sheet
			Die shear strength	Sampling Inspection	Bonding tester	Data sheet
3 **Annealing**	Production	Manufacturing Instruction Sheet	Temperature condition	Each time	Visual	Data sheet
			Annealing time	Each time	Timer / Visual	Data sheet
4 **Wire Bonding**	Production	Manufacturing Instruction Sheet	Appearance	Sampling Inspection	Microscope	Data sheet
			Bonding strength	Sampling Inspection	Bonding tester	Data sheet
			Wire type	Each time	Label (Visual)	Data sheet
5 **Frequency Adjustment**	Production	Manufacturing Instruction Sheet	Frequency	100% Inspection	Frequency Counter	PC
Cap / 1 In coming Inspection	Inspection	Purchasing Specification In-coming Inspection Standard	Appearance	Sampling Inspection	Microscope	Data sheet
			Dimension	Sampling Inspection	Micrometer,Dialgauge	Data sheet
6 **Hermetic Sealing**	Production	Manufacturing Instruction Sheet	Appearance	Sampling Inspection	Microscope	Data sheet
			Current value	Sampling Inspection	Visual	Data sheet
7 **Thermal Transaction**	Production	Manufacturing Instruction Sheet	Temperature condition	Each time	Visual	Data sheet
			Time	Each time	Timer / Visual	Data sheet
8 **Air Leakage Inspection**	Production	Manufacturing Instruction Sheet	Pressure, Time	Each time	He leakage detector	Data sheet
			Leakage Rate	100% Inspection	Equipment	Data sheet
9 **Marking**	Production	Manufacturing Instruction Sheet	Appearance	Sampling Inspection	Microscope	Data sheet

EG-2***CA PKG Process Quality Control

Seiko Epson Corp.
EG2xxxCA_Q_0001

Manufacturing Process Chart	Section In Charge	Standards	Inspection Control Item	Inspection Method	Instruments	Record
10 **Finished Products Inspection**	Production	Manufacturing Instruction Sheet	Appearance	Sampling Inspection	Visual	Data sheet
			Electrical Characteristics	100% Inspection	Frequency Counter	Data sheet
11 **Outgoing Inspection**	Inspection	Delivery Specification Outgoing Inspection Sheet	Acceding to inspection standard.	Sampling Inspection	Instruments / Microscope	Data sheet
12 **Taping**	Production	Manufacturing Instruction Sheet	Tape Peeling Strength	Sampling Inspection	Peeling Strength Tester	Data sheet
			Appearance	Sampling Inspection	Visual	Data sheet
13 **Packing**	Production Control	Manufacturing Instruction Sheet Daily Shipping List	Customers / Frequency / Quantity	100% Inspection	Visual	Delivery slip

Structure Diagram 構造図

Model 型式	**EG-2xxxCA Series**	EG-2012CA / EG-2001CA / EG-2002CA EG-2121CA / EG-2102CA / EG-2101CA
Document No. 管理№	-	EG2xxxCA_D_0001

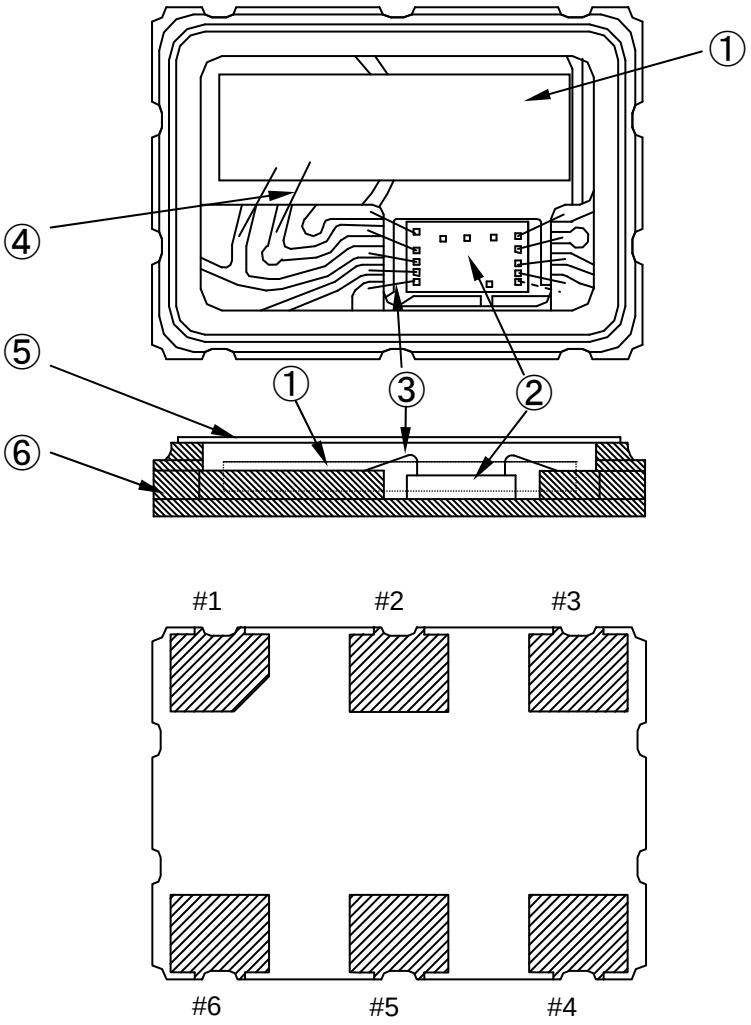

No.	Name of Part 部品名
⑥	Package パッケージ
⑤	Lid リッド
④	Bonding wire ボンディングワイヤ
③	Bonding wire ボンディングワイヤ
②	IC conductive adhesive IC 接着剤
	IC
①	Crystal Adhesive 水晶接着
	Crystal chip 水晶片

RELIABILITY TEST DATA

Product Name : EG-2102 / EG-2121CA

The Company evaluation condition

We evaluate environmental and mechanical characteristics by the following test condition . G-0021-01-003E

No.	ITEM	TEST CONDITIONS	VALUE *1		TEST Qty [n]	FAIL Qty [n]
			Δ f / f *2 [1 × 10^{-6}]	Electrical characteristics		
1	High temperature storage	+100 ℃ × 1 000 h	*3 ± 30	Satisfy specification after test	22	0
2	Low temperature storage	-40 ℃ × 1 000 h	*3 ± 30		22	0
3	High temperature bias	+85 ℃ × VccMAX V × 1 000 h	*3 ± 20		22	0
4	Low temperature bias	-5 ℃ × VccMAX V × 1 000 h	*3 ± 20		22	0
5	Temperature humidity bias	+85 ℃ × 85 %RH × VccMAX V × 1 000 h	*3 ± 20		22	0
6	Temperature cycle	-40 ℃ ⇔ +100 ℃ 30 min at each temp. 100 cycles	*3 ± 20		22	0
7	Resistance to soldering heat	For convention reflow soldering furnace (3 times)	± 10		22	0
8	Drop	Free drop from 750 mm height on a hard wooden board for 3 times (Board is thickness more than 30 mm)	± 20		22	0
9	Vibration	10 Hz to 55 Hz amplitude 0.75 mm 55 Hz to 500 Hz acceleration 98 m/s^2 10 Hz → 500 Hz → 10 Hz 15 min / cycle 6 h (2 h × 3 directions)	± 10		22	0
10	Sealing	For He leak detector	1 × 10^{-9} Pa・m^3/s Max.		11	0
11	Solderability	Dip termination into solder bath at +235 ℃ ± 5 ℃ for 5 s (Using Rosin Flux)	Termination must be 95 % covered with fresh solder		11	0
12	Pull - off	10 N press for 10 s ± 1 s Ref. EIAJ ED-4702	No peeling-off at a solder part		11	0
13	Solvent resistance	Ref. JIS C 0052 or IEC 60068-2-45	The marking shall be legible		11	0

Notes

1. *1 Each test done independently.
2. *2 Measuring 2 h to 24 h later leaving in room temperature after each test.
3. *3 Pre conditionings Initial value shall be after 24 h at room temperature.

Qualification Data

Product Name : EG-2102 / EG-2121CA

Δ f / f

G-0021-01-004E

1. High temp. storage
+100 ℃ × 1 000 h

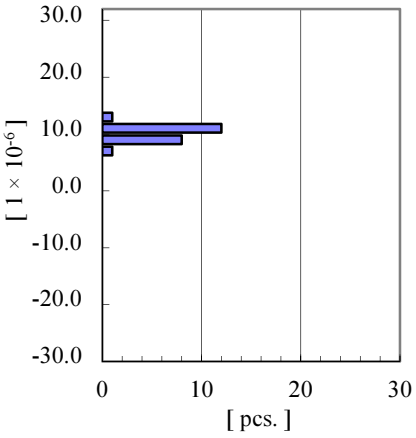

2. Low temp. storage
-40 ℃ × 1 000 h

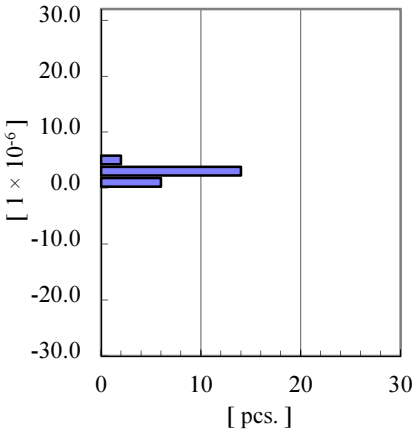

3. High temp. bias
+85 ℃ × VccMAX × 1 000 h

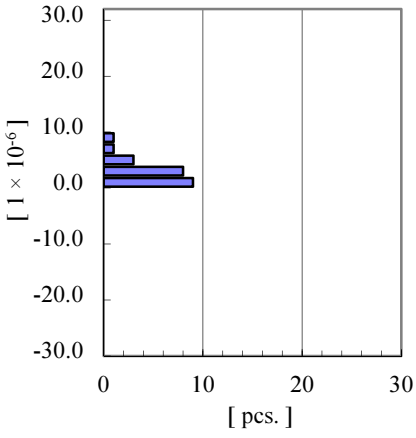

4. Low temp. bias
-20 ℃ × VccMAX ×1 000 h

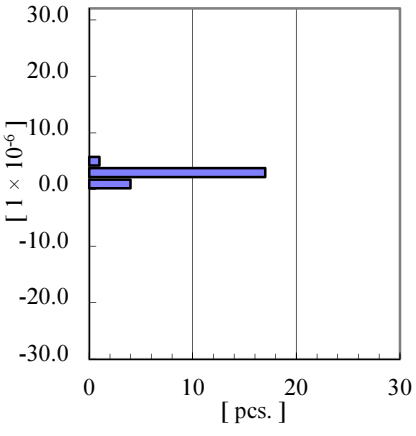

5. Temp. humidity bias
+85 ℃ × 85 %RH × VccMAX
× 1 000 h

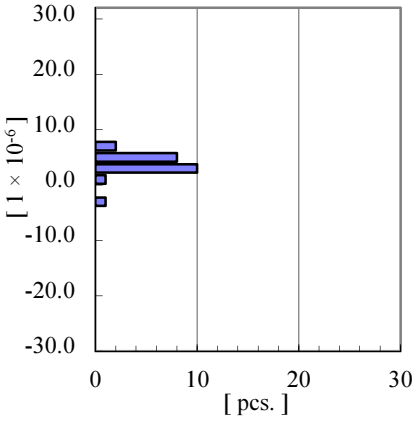

6. Temp. cycle
-40 ℃ ⇔ +100 ℃
100 cycles

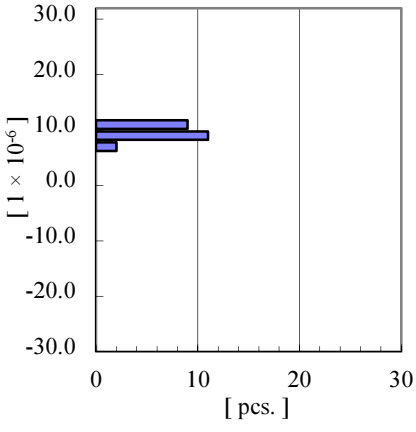

7.Resistance to soldering heat
For convention reflow soldering
furnace (3 times)

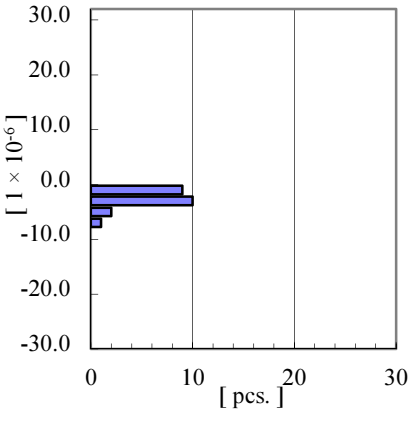

8. Drop
750 mm × 3 times

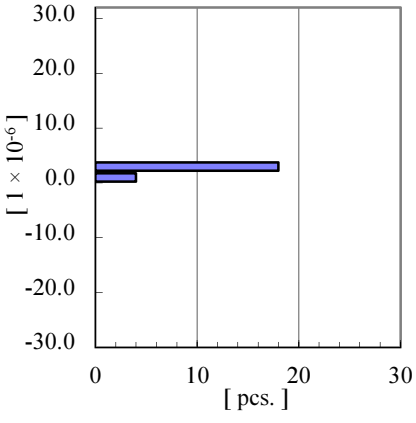

9. Vibration
10 Hz to 55 Hz amplitude 0.75 mm
55 Hz to 500 Hz acceleration 98 m/s²
15 min / cycle 6 h (2 h ×3 directions)

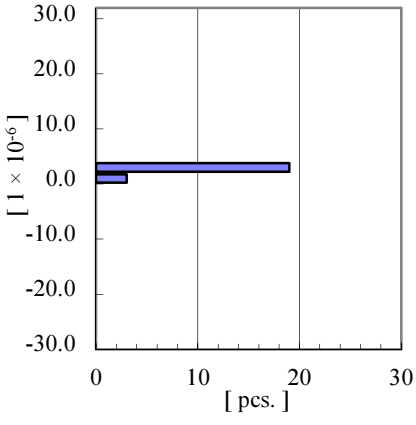

Qualification Data