Multi output OSC (2port) MG7050VAN

SEIKO EPSON CORPORATION

Product name MG7050VAN 125.000000MHz 2ADJDN

Product Number / Ordering code X1M0004210016xx

Please refer to the 10.Packing information about xx (last 2 digits)

Output waveform LVDS

Pb free / Complies with EU RoHS directive

Reference weight Typ. 163 mg

1.Absolute maximum ratings						
Parameter	Symbol	Min.	Typ.	Max.	Unit	Conditions / Remarks
Maximum supply voltage	Vcc-GND	-0.5	-	4	V	-
Storage temperature	T_stg	-55	-	125	ºC	Storage as single product
Input voltage	Vin	-0.5	-	Vcc+0.5	V	-

2.Specifications(characteristics)						
Parameter	Symbol	Min.	Typ.	Max.	Unit	Conditions / Remarks
Output frequency	f0		125.0000		MHz	2 output
Supply voltage	Vcc	2.375	2.5	2.625	V	Vcc,Vcc1 and Vcc2
Operating temperature	T_use	-5	-	85	ºC	-
Frequency tolerance	f_tol	-50	-	50	$x10^{-6}$	-
Current consumption	Icc	-	35	50	mA	2-output OE=Vcc L-LVDS=100Ω
Stand-by current	I_std	-	-	-	mA	-
Disable current	I_dis	-	7	18.0	mA	OE = GND
Symmetry	SYM	45	-	55	%	-
Output voltage(LVDS)	VOD	247	350	454	mV	-
	dVOD	-	-	50	mV	-
	Vos	1.125	1.25	1.375	V	-
	dVos	-	-	150	mV	-
Output load condition(LVDS)	L_LVDS	-	100	-	Ω	-
Input voltage	V_{IH}	70%Vcc	-	-		OE and FSEL terminals
	V_{IL}	-	-	30%Vcc		OE and FSEL terminals
Rise time	t_r	-	200	400	ps	-
Fall time	tf	-	200	400	ps	-
Start-up time	t_str	-	5	10	ms	minimum supply voltage to be 0 s
Jitter	t_{DJ}	-	-	N/A	ps	Deterministic Jitter
	T_{RJ}	-	-	N/A	ps	Random Jitter
	t_{RMS}	-	-	N/A	ps	δ(RMS of total distribution)
	t_{p-p}	-	-	N/A	ps	Peak to Peak
	t_{acc}	-	-	N/A	ps	Accumulated Jitter(σ) n=2 to 50000 cycles
Phase jitter	t_{PJ}	-	0.18	0.3	ps	Offset Frequency: 12 kHz to 20 MHz
Phase noise	L(f)	-	-	-	dBc/Hz	Offset 1 Hz
		-	-53.7	-	dBc/Hz	Offset 10 Hz
		-	-87.4	-	dBc/Hz	Offset 100 Hz
		-	-115.8	-	dBc/Hz	Offset 1 kHz
		-	-144.5	-	dBc/Hz	Offset 10 kHz
		-	-151.0	-	dBc/Hz	Offset 100 kHz
		-	-153.4	-	dBc/Hz	Offset 1 MHz
skew	t_skew	-	-	50	ps	-
Frequency aging	f_age	-10	-	10	$x10^{-6}$/Year	@+25ºC first year
		-	-	-		-

3.Test circuit

1) Measurement condition

(1) Oscilloscope

• Bandwidth should be 5 times higher than DUT's output frequency (4 GHz).

• Probe ground should be placed closely from test point and lead length should be as short as possible.

(2) By-pass capacitor 1 (approx. 0.01 µF to 0.1 µF) places closely between Vcc and GND.

(3) By-pass capacitor 2 (approx. 10 µF) places closely between power supply terminals on the board.

(4) Use the current meter whose internal impedance value is small.

(5) Power supply

• Start up time (0 V→90 %Vcc) of power source should be more than 150 µs and slew rate should be less than 19.8 mV/µs.

• Impedance of power supply should be as low as possible.

2) 2 output type

1) AC and current measurement

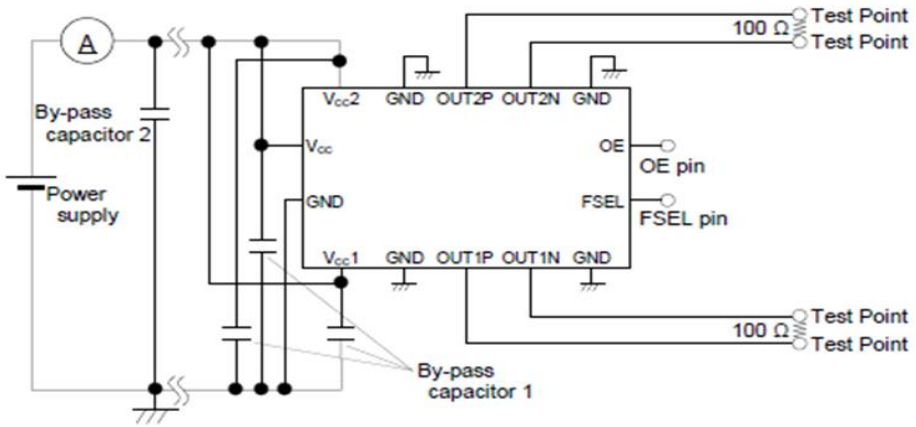

2) DC measurement

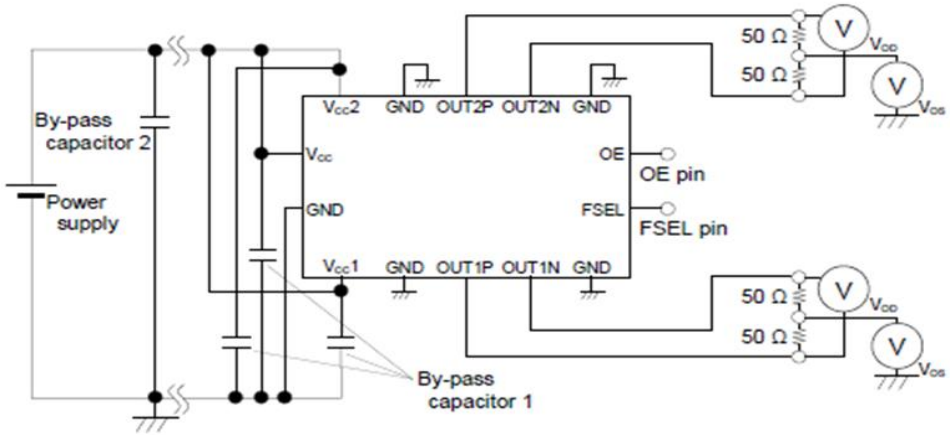

(3)PCB layout (multilayers, with Vcc and GND layer inside)

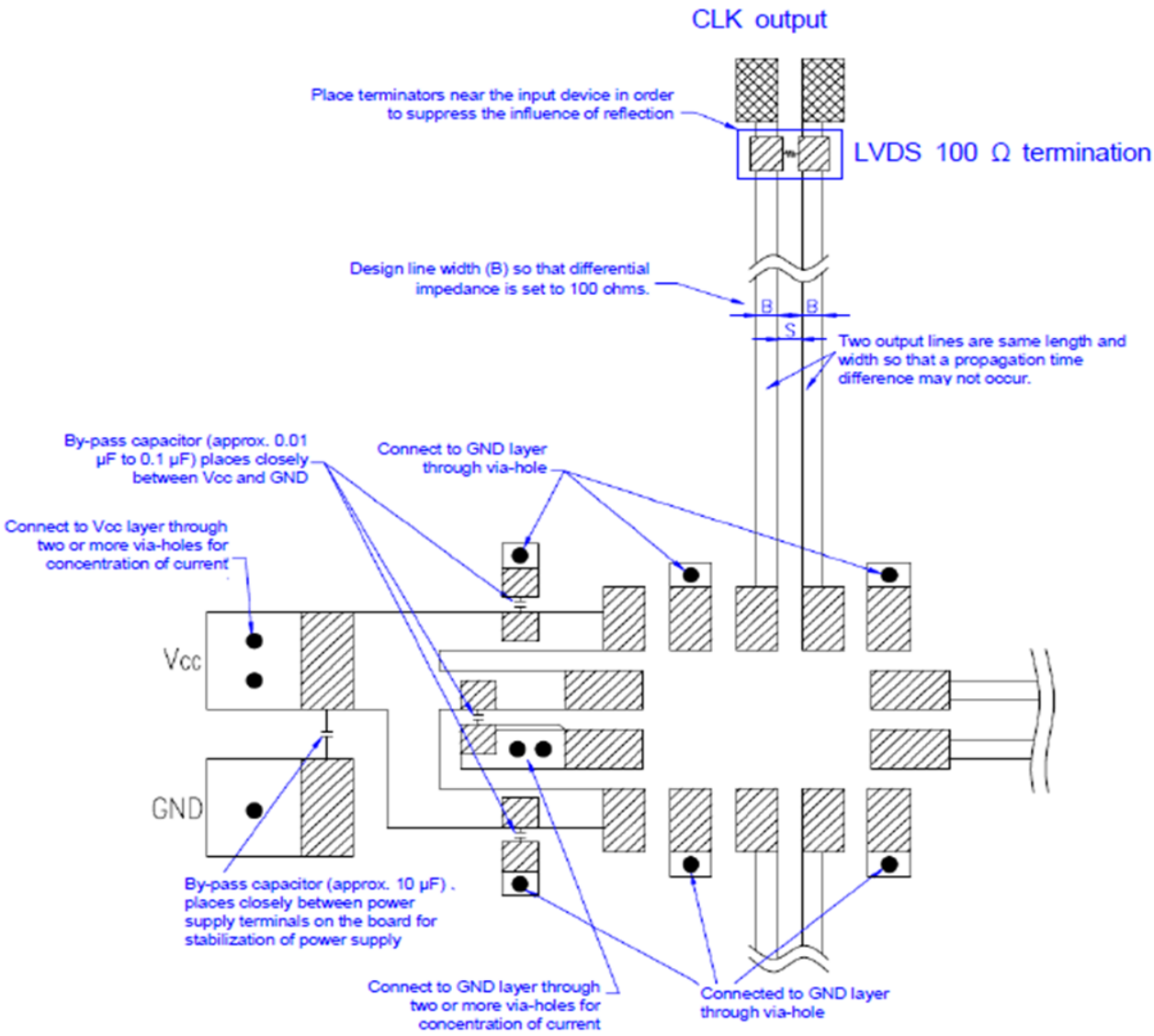

3) 4 output type

1) AC and current measurement

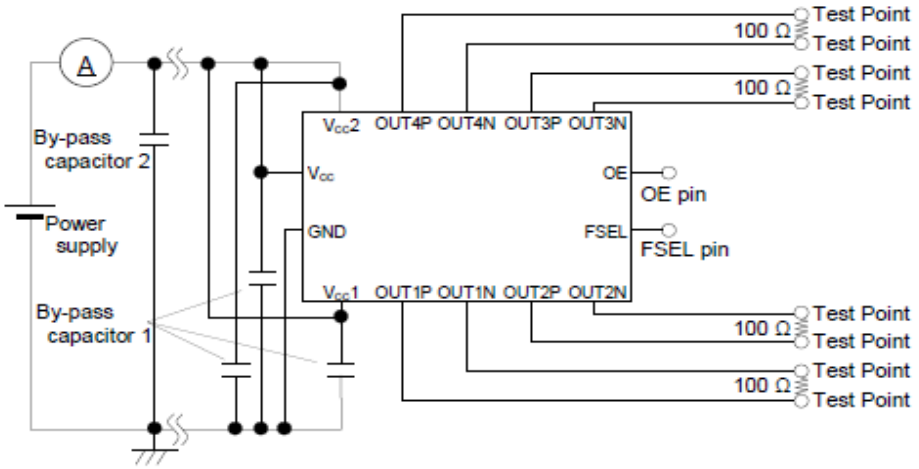

2) DC measurement

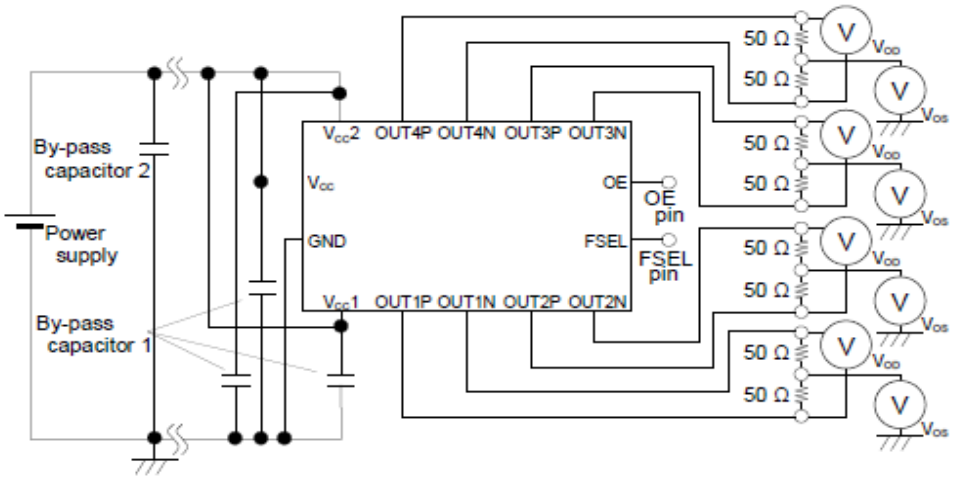

(3)PCB layout (multilayers, with Vcc and GND layer inside)

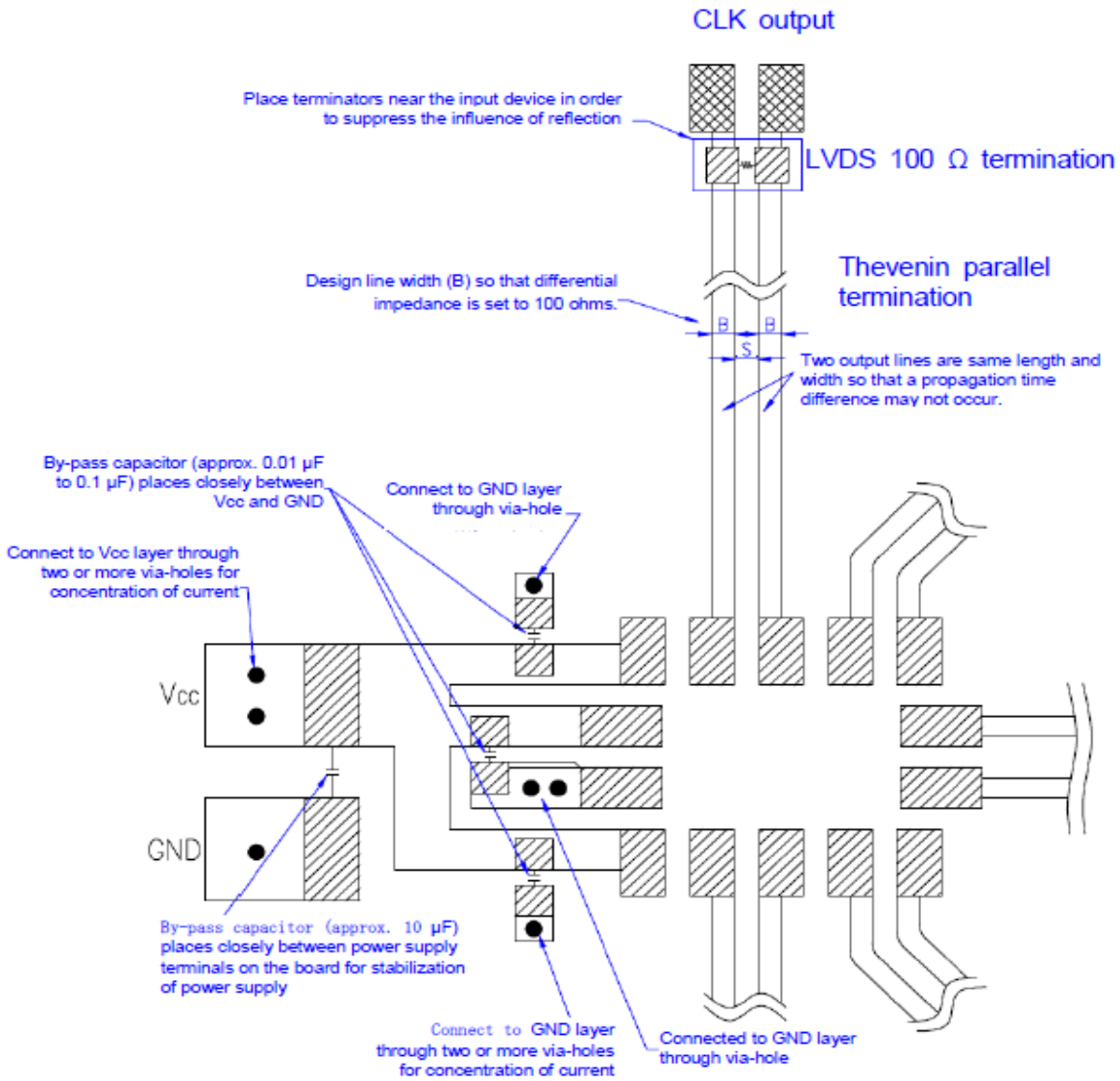

4.Timing chart

1) Output waveform

Output wave form (OUTnP and OUTnN)

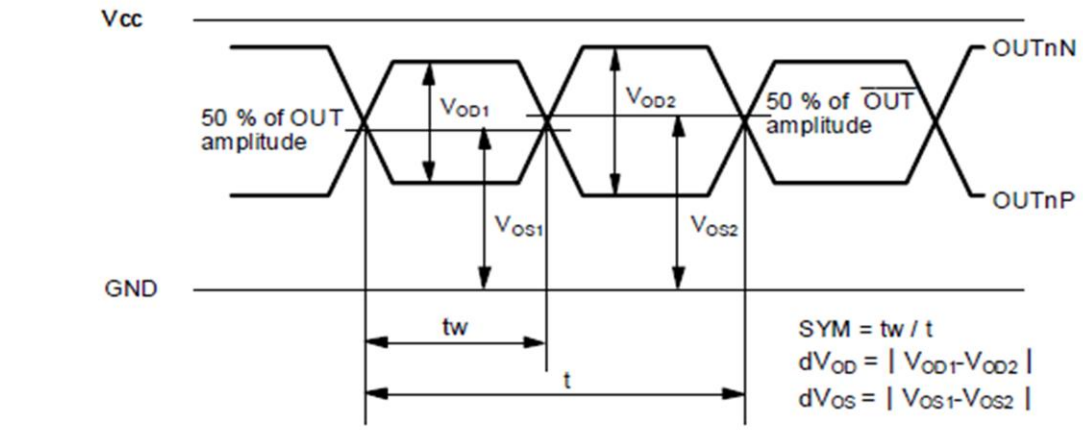

Differential output wave form (OUTnP−OUTnN)

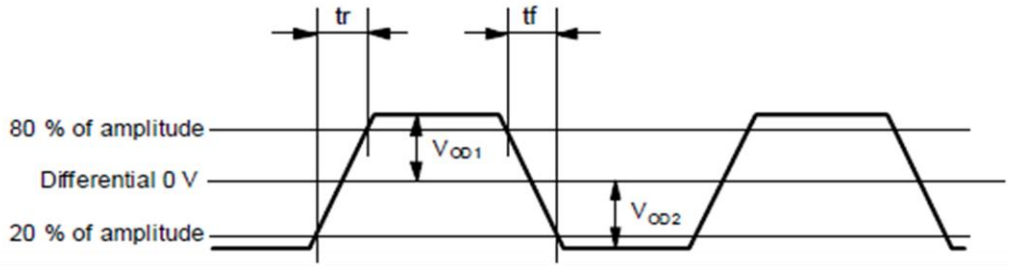

5.Block diagram

2 outputs

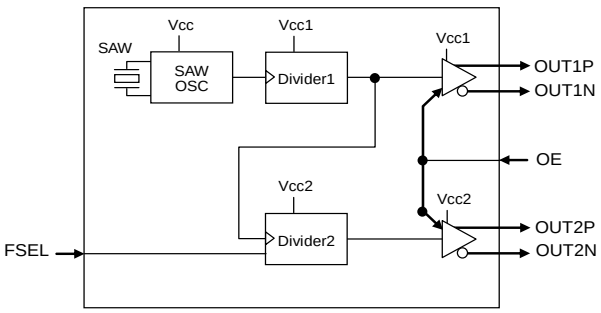

4 outputs

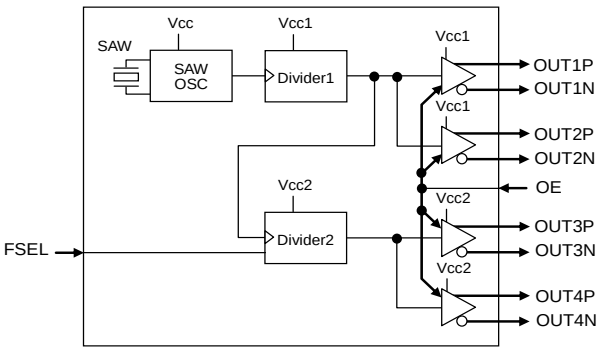

6. FSEL function

2-outputs		OUT1	OUT2
4-outputs		OUT1 / OUT2	OUT3 / OUT4
FSEL	H	fo	fo
	L	fo	fo/2

7.External dimensions (Unit: mm)

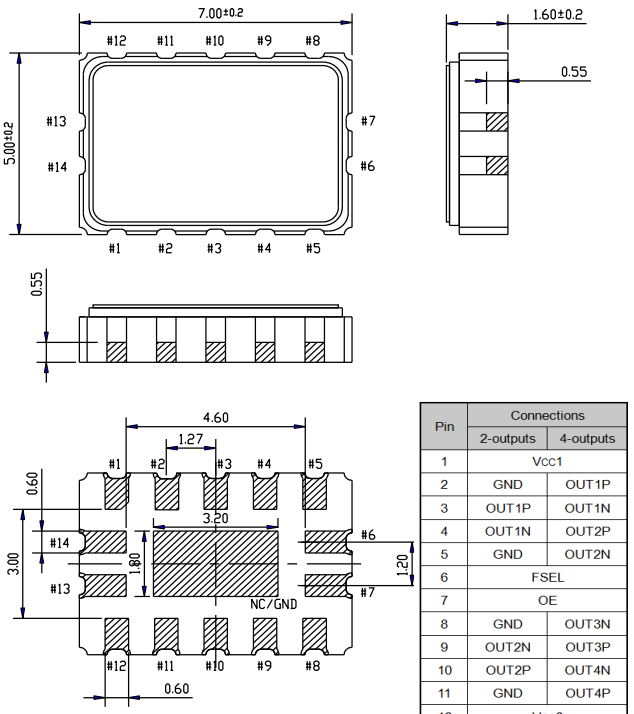

Pin	Connections	
	2-outputs	4-outputs
1	Vcc1	
2	GND	OUT1P
3	OUT1P	OUT1N
4	OUT1N	OUT2P
5	GND	OUT2N
6	FSEL	
7	OE	
8	GND	OUT3N
9	OUT2N	OUT3P
10	OUT2P	OUT4N
11	GND	OUT4P
12	Vcc2	
13	Vcc	
14	GND	

OE pin = "H" : Specified frequency output.
OE pin = "L" : Output is high impedance

8.Footprint(Recommended) (Unit: mm)

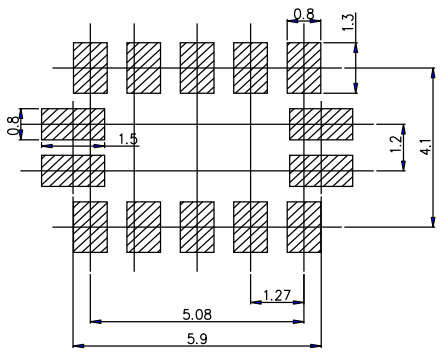

To maintain stable operation, provide a 0.01 µF to 0.1 µF by-pass capacitor at a location as near as possible to the power source terminal of the crystal product (between V_{CC}, $V_{CC}1$, $V_{CC}2$ - GND).

9.Reflow profile

Reflow condition (Follow of JEDEC STD-020D.01)

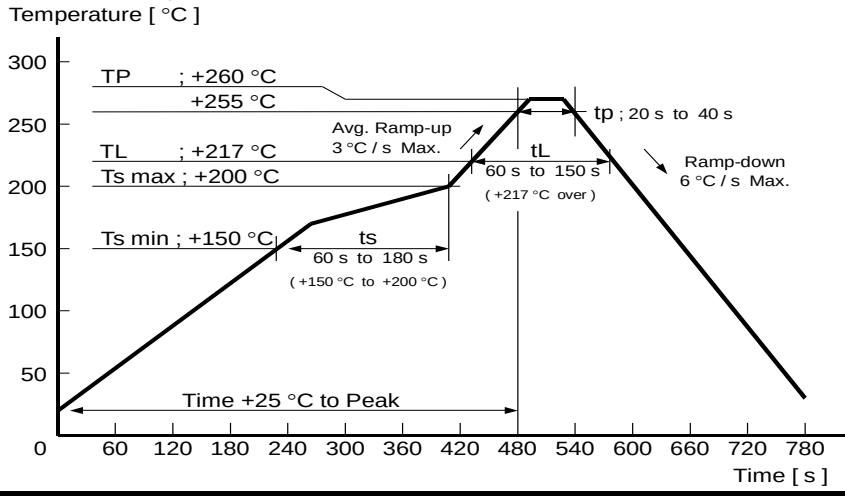

10.Packing information

[1]Product number last 2 digits code(xx) description The recommended code is "00"

X1M0004210016xx

Code	Condition	Code	Condition
01	Any Q'ty vinyl bag(Tape cut)	13	500pcs / Reel
11	Any Q'ty / Reel	00	1000pcs / Reel
12	250pcs / Reel		

[2] Taping specification

Subject to EIA-481 & IEC-60286

(1) Tape dimensions

Material of the Carrier Tape : PS

Material of the Top Tape : PET+PE

Unit: mm

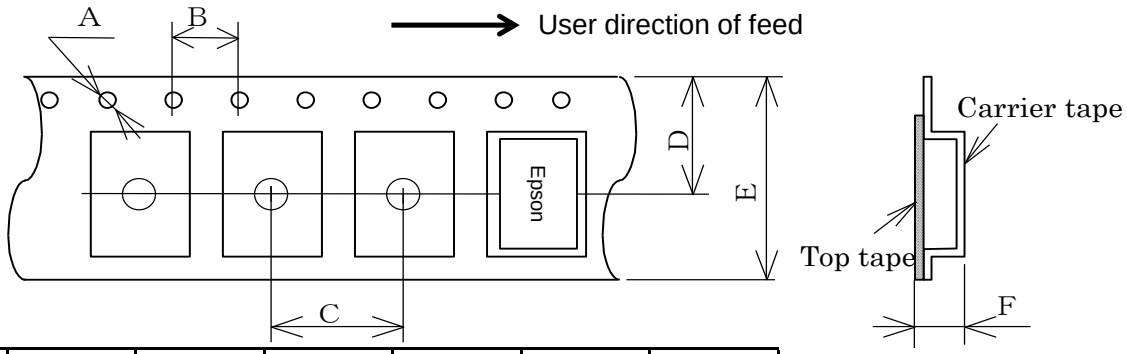

Symbol	A	B	C	D	E	F
Value	Φ1.5	4	8	9.25	16	2.3

(2) Reel dimensions

Center material : PS

Material of the Reel : PS

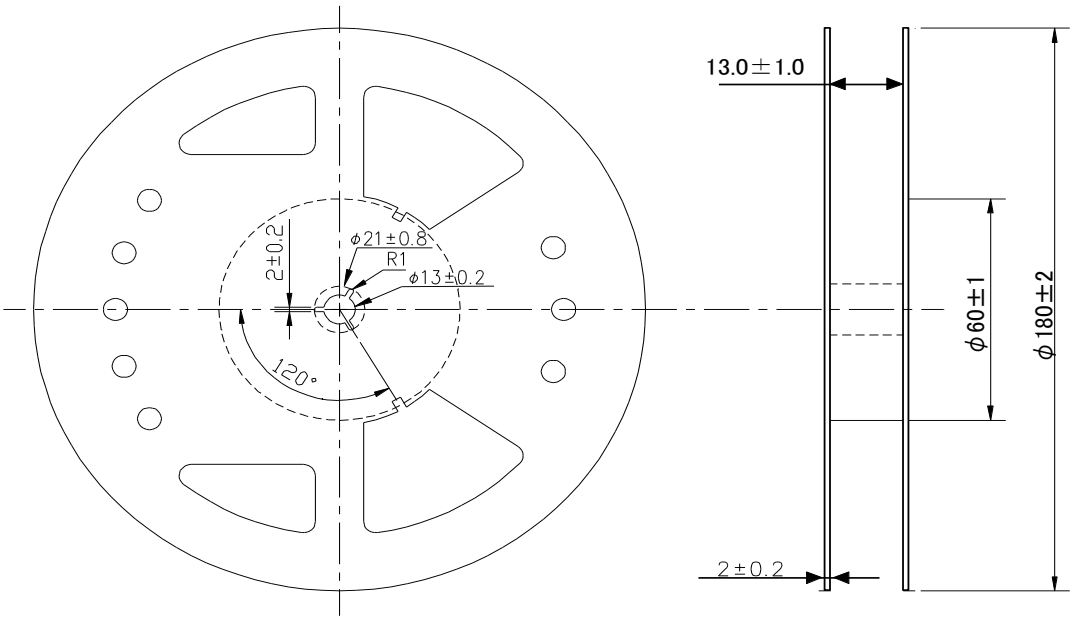

11.Notice

- This material is subject to change without notice.
- Any part of this material may not be reproduced or duplicated in any form or any means without the written permission of Seiko Epson.
- The information about applied circuitry, software, usage, etc. written in this material is intended for reference only. Seiko Epson does not assume any liability for the occurrence of infringing on any patent or copyright of a third party. This material does not authorize the licensing for any patent or intellectual copyrights.
- When exporting the products or technology described in this material, you should comply with the applicable export control laws and regulations and follow the procedures required by such laws and regulations.
- You are requested not to use the products (and any technical information furnished, if any) for the development and/or manufacture of weapon of mass destruction or for other military purposes. You are also requested that you would not make the products available to any third party who may use the products for such prohibited purposes.
- These products are intended for general use in electronic equipment. When using them in specific applications that require extremely high reliability, such as the applications stated below, you must obtain permission from Seiko Epson in advance.
  / Space equipment (artificial satellites, rockets, etc.)
  / Transportation vehicles and related (automobiles, aircraft, trains, vessels, etc.)
  / Medical instruments to sustain life
  / Submarine transmitters
  / Power stations and related
  / Fire work equipment and security equipment
  / Traffic control equipment
  / And others requiring equivalent reliability.

- All brands or product names mentioned herein are trademarks and/or registered trademarks of their respective.

12.Contact us

www5.epsondevice.com/en/contact/