VCXO/VCSO VG5032EDN

Product name VG5032EDN 148.500000MHz CJHHBA
Product code / Ordering code X1G0049110017xx
Please refer to the 8.Packing information about xx (last 2 digits)

Output waveform LV-PECL
Pb free / Complies with EU RoHS directive
Reference weight Typ.64 mg

1.Absolute maximum ratings

Parameter	Symbol	Min.	Typ.	Max.	Unit	Conditions / Remarks
Maximum supply voltage	Vcc-GND	-0.5	-	+5	V	-
Storage temperature	T_stg	-55	-	+125	ºC	-
Input voltage	Vin	-0.5	-	Vcc+0.5	V	Vc pin

2.Specifications(characteristics)

Parameter	Symbol	Min.	Typ.	Max.	Unit	Conditions / Remarks
Output frequency	f0		148.5000		MHz	
Supply voltage	Vcc	3.135	3.3	3.465	V	-
Control voltage	Vc	0	1.65	3.3	V	-
Operating temperature	T_use	-40	-	+105	ºC	-
Frequency tolerance	f_tol	-50	-	+50	$x10^{-6}$	includes 20 years aging
Current consumption	Icc	-	-	60	mA	L_ECL =50Ω
Disable current	I_dis	-	-	-	mA	-
Frequency control range	f_cont	+/-100	-	-	$x10^{-6}$	-
Absolute pull range	APR	+/-50	-	-	$x10^{-6}$	Vc=1.65V+/-1.65V
Modulation characteristics	BW	10	-	-	kHz	+/-3 dB
Input resistance	Rin	100	-	-	kΩ	DC Level
Frequency change polarity	-					Positive polarity
Symmetry	SYM	45	-	55	%	Vcc-1.3V, Vc=Vcc/2
Output voltage	VOH	Vcc-1.1	-	-	V	-
	VOL	-	-	Vcc-1.5	V	-
Output load condition	L_ECL	-	50	-	Ω	Outputs terminated to Vcc-2.0V
Input voltage	VIH	70%Vcc	-	-	V	OE pin
	VIL	-	-	30%Vcc	V	OE pin
Rise time	tr	-	-	0.5	ns	20 % to 80 % of amplitude
Fall time	tf	-	-	0.5	ns	20 % to 80 % of amplitude
Start-up time	t_str	-	-	10	ms	t=0 at 90 %Vcc
Phase noise	F_{CN}	-	-65	-	dBc/Hz	Offset 10Hz
		-	-97	-	dBc/Hz	Offset 100Hz
		-	-124	-	dBc/Hz	Offset 1kHz
		-	-138	-	dBc/Hz	Offset 10kHz
		-	-147	-	dBc/Hz	Offset 100kHz
Phase jitter	t_{PJ}	-	0.15	-	ps	Offset Frequency: 12kHz to 20MHz
Frequency aging	f_aging	-	-	-	$x10^{-6}$	Included in frequency tolerance

3.Timing chart

Output wave form

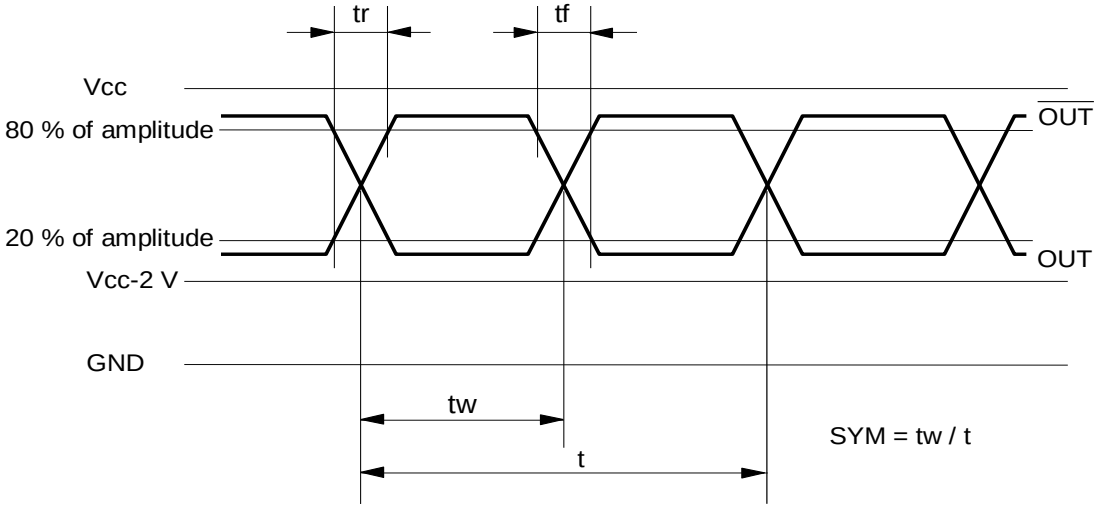

4.Test circuit

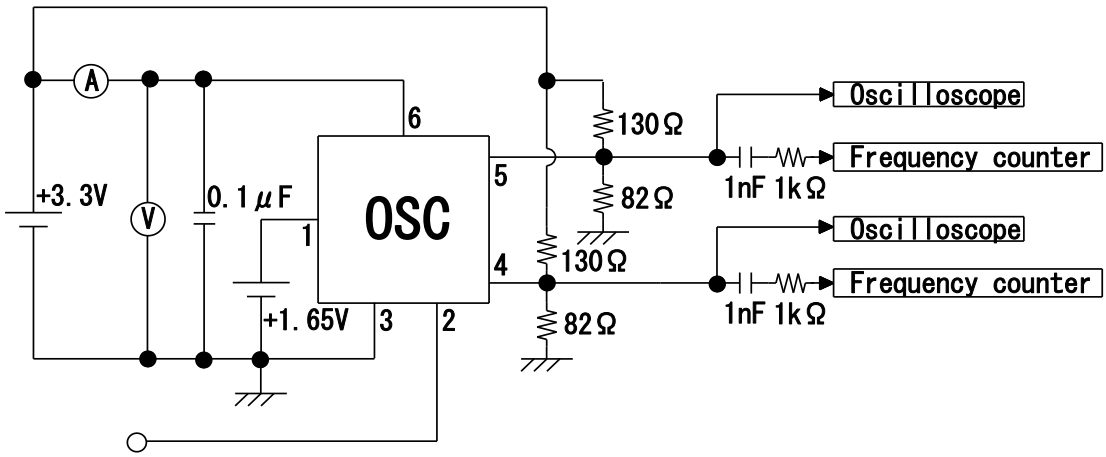

[Pin connection]

1. Vc
2. OE
3. GND
4. OUT1 (Positive)
5. OUT2 (Negative)
6. Vcc

3) Condition

(1) Oscilloscope

- Bandwidth should be 5 times higher than DUT's output frequency.
- Probe ground should be placed closely from test point and lead length should be as short as possible.

(2) By-pass capacitor (approx. 0.01μF to 0.1 μF) should be placed closely between Vcc and GND.

(3) Use the current meter whose internal impedance value is small.

(4) Power supply

- Start up time(0 V→90 %Vcc)of power source should be more than 150μs.
- Impedance of power supply should be as low as possible.

5.External dimensions (Unit: mm)

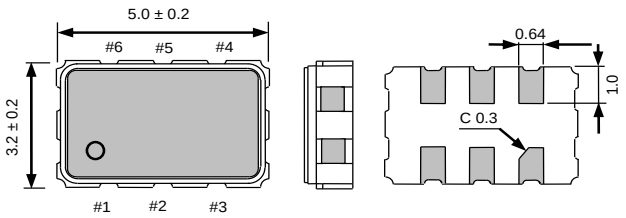

Pin map

Pin	Connection
1	Vc
2	OE
3	GND
4	OUT1(positive)
5	OUT2(Negative)
6	Vcc

6.Footprint(Recommended) (Unit: mm)

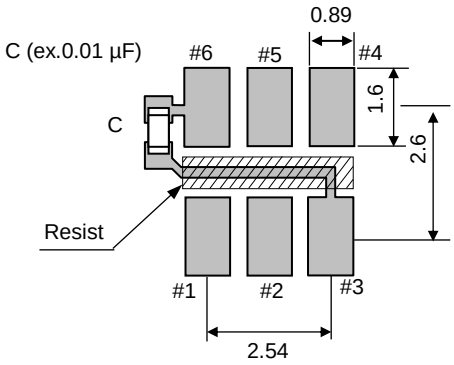

To maintain stable operation, provide a 0.01uF to 0.1uF by-pass capacitor at a location as near as possible to the power source terminal of the crystal product (between Vcc - GND).

7.Reflow profile

Reflow condition (Follow of JEDEC STD-020D.01)

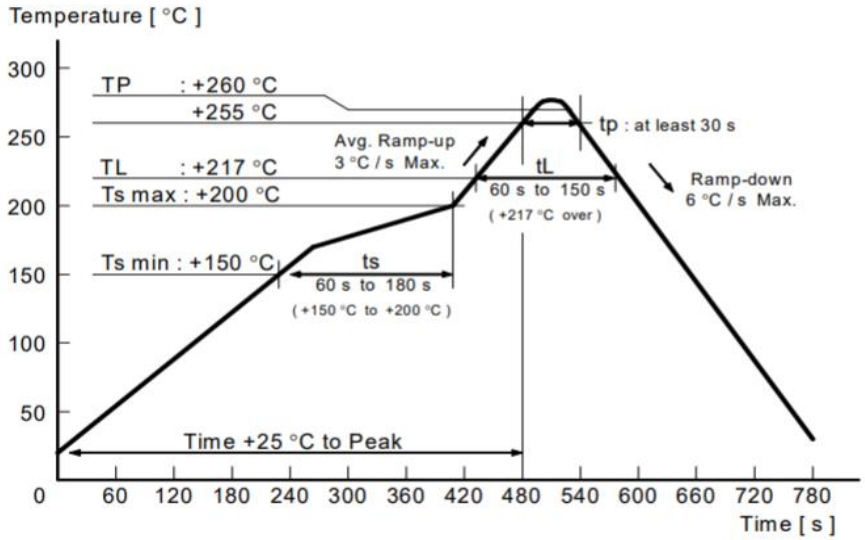

8.Packing information

[1]Product number last 2 digits code(xx) description

The recommended code is "00"

X1G0049110017xx

Code	Condition
00	1000pcs / Reel
01	Any Q'ty vinyl bag(Tape cut)
11	Any Q'ty / Reel

[2] Taping specification

Subject to EIA-481 & IEC-60286

(1) Tape dimensions

Material of the Carrier Tape : PS

Material of the Top Tape : PET

Unit: mm

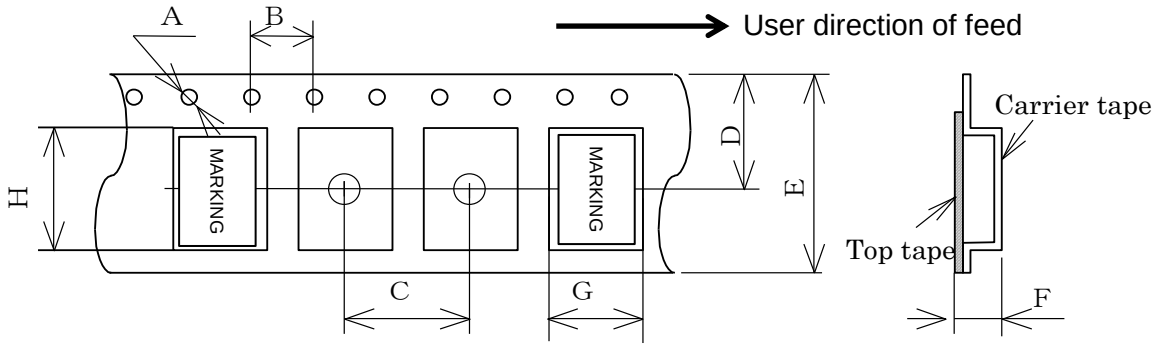

Symbol	A	B	C	D	E	F	G	H
Value	Φ1.5	4.0	8.0	7.25	12.0	1.7	3.5	5.4

(2) Reel dimensions

Material of the Reel : PS

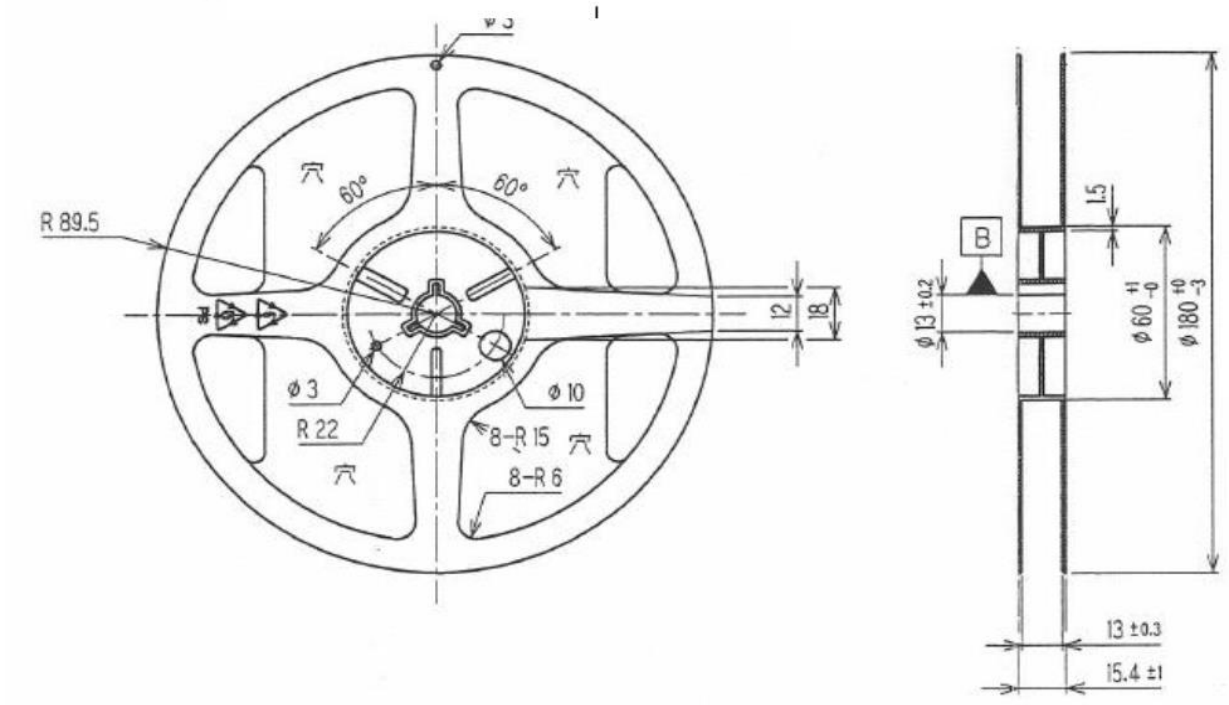

9.Notice

- This material is subject to change without notice.
- Any part of this material may not be reproduced or duplicated in any form or any means without the written permission of Seiko Epson.
- The information about applied circuitry, software, usage, etc. written in this material is intended for reference only. Seiko Epson does not assume any liability for the occurrence of infringing on any patent or copyright of a third party. This material does not authorize the licensing for any patent or intellectual copyrights.
- When exporting the products or technology described in this material, you should comply with the applicable export control laws and regulations and follow the procedures required by such laws and regulations.
- You are requested not to use the products (and any technical information furnished, if any) for the development and/or manufacture of weapon of mass destruction or for other military purposes. You are also requested that you would not make the products available to any third party who may use the products for such prohibited purposes.
- These products are intended for general use in electronic equipment. When using them in specific applications that require extremely high reliability, such as the applications stated below, you must obtain permission from Seiko Epson in advance.
  / Space equipment (artificial satellites, rockets, etc.)
  / Transportation vehicles and related (automobiles, aircraft, trains, vessels, etc.)
  / Medical instruments to sustain life
  / Submarine transmitters
  / Power stations and related
  / Fire work equipment and security equipment
  / Traffic control equipment
  / And others requiring equivalent reliability.

- All brands or product names mentioned herein are trademarks and/or registered trademarks of their respective.

10.Contact us

http://www5.epsondevice.com/en/contact/