EPSON
EXCEED YOUR VISION

Temperature Compensated Crystal Oscillator (TCXO)

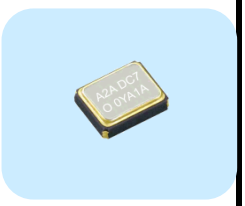

Data sheet

MODEL : TG-5006CJ-51L 40.000000 MHz

Product. No. : X1G0041310031xx

Please refer to the 10.Packing information about xx (last 2 digits)

SEIKO EPSON CORPORATION

Pb free	Pb free.
RoHS Compliant	Complies with EU RoHS directive. *About the products without the Pb-free mark. Contains Pb in products exempted by EU RoHS directive. (Contains Pb in sealing glass, high melting temperature type solder or other.)

INTRODUCTION
1. Any part of this material may not be reproduced or duplicated in any form or any means without the written permission of Seiko Epson.
2. This sheet is not intended to guarantee or provide an approval of implementation of industrial patents.

[1] Characteristics

· Package size (2.0 mm×1.6 mm×0.73 mm)
· High stability TCXO
· Output waveform : Clipped sine wave
· Reference weight Typ.9.1mg

[2] Absolute maximum ratings

Parameter	Symbol	Specifications			Unit	Conditions
		Min.	Typ.	Max.		
Supply voltage	Vcc-GND	-0.3	-	+4.0	V	-
Storage temperature range	T_stg	-40	-	+90	°C	Storage as single product

[3] Recommended operating conditions

Parameter	Symbol	Specifications			Unit	Conditions
		Min.	Typ.	Max.		
Supply voltage	Vcc	2.85	3	3.15	V	-
	GND	0	-	0	V	-
Operating temperature range	T_use	-30	-	+85	°C	-
Output load	Load_R	9	10	11	kΩ	0
	Load_C	9	10	11	pF	DC cut capacitor=0.01µF
	Cc	0.01	-	-	µF	DC-cut capacitor *

* DC-cut capacitor is not included in this TCXO. Please attach an external DC-cut capacitor to the out pin.

[4] Frequency characteristics

(Vcc=3 V, GND=0.0 V, Load=10 kΩ // 10 pF, T_use=+25°C)

Parameter	Symbol	Specifications			Unit	Conditions
		Min.	Typ.	Max.		
Output Frequency	fo	-	40	-	MHz	
Frequency tolerance	f_tol	-1.0	-	+1.0	$x10^{-6}$	T_use=+25°C+/-2°C Before reflow
Frequency tolerance *1	f_tol	-2.0	-	+2.0	$x10^{-6}$	T_use=+25°C+/-2°C After 2 reflows *2
Frequency / temperature characteristics	fo-Tc	-2.0	-	+2.0	$x10^{-6}$	T_use = -30 ºC to +85 ºC
Frequency / load coefficient	fo-Load	-0.2	-	+0.2	$x10^{-6}$	10 kΩ // 10 pF +/- 10%
Frequency / voltage coefficient	fo-Vcc	-0.2	-	+0.2	$x10^{-6}$	Vcc1.8V +/- 0.1V Vcc2.5V / 3.0V
Frequency aging	f_age	-1.0	-	+1.0	$x10^{-6}$	1st year, T_use=25degC
		-3.0	-	+3.0	$x10^{-6}$	5 years, T_use=+25ºC

*1 Include initial frequency tolerance and frequency deviation after reflow cycles.
*2 Measured in the elapse of 24 hours after reflow soldering.
*3 Vcc +/- 5% must be in operating supply voltage range (2.85 V to 3.15 V)

[5] Electrical characteristics

(Vcc=3 V, GND=0.0 V, Load=10 kΩ // 10 pF, T_use=+25°C)

Parameter	Symbol	Specifications			Unit	Conditions
		Min.	Typ.	Max.		
Current consumption	Icc	-	-	2.0	mA	T_Use = +25ºC , 10 kΩ//10pF
Output level	Vp-p	0.8	-	1.5	V	Peak to peak 10 kΩ//10pF +/- 10%
Symmetry	SYM	40	-	60	%	GND Level
Start up time	t_sta	-	-	2.0	ms	Within 90% of final amp.
		-	-	2.0	ms	ΔF = +/- 1.0 x 10-6
Harmonics	-	-	-	-10.0	dBc	3rd
Phase noise	L(f)	-	-	-	dBc/Hz	-
		-	-87	-83		10Hz offset
		-	-113	-109		100Hz offset
		-	-134	-130		1kHz offset
		-	-148	-145		10kHz offset
		-	-149	-147		100kHz offset
		-	-150	-148		1MHz offset

[6] Test circuit

1) Output Load : Load_R // Load_C = 10 kΩ // 10 pF

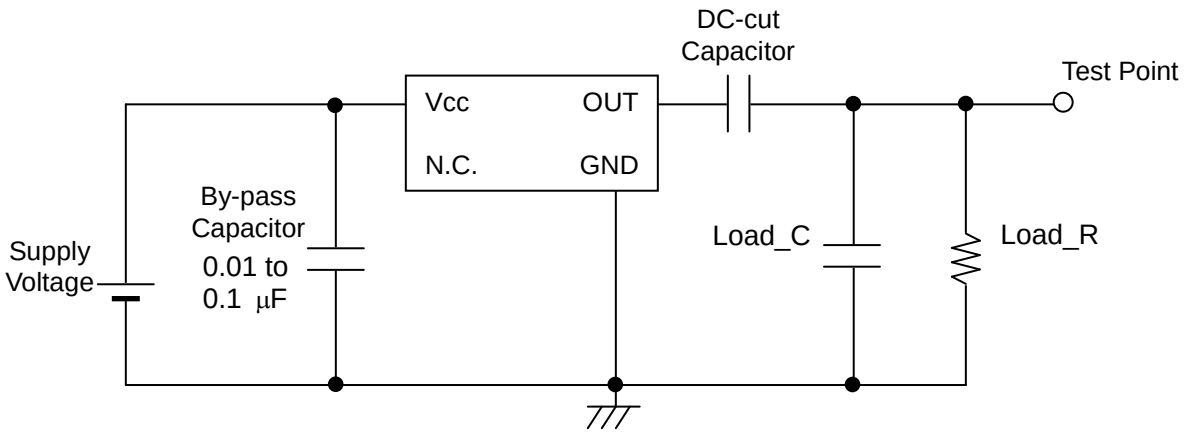

2) Current consumption

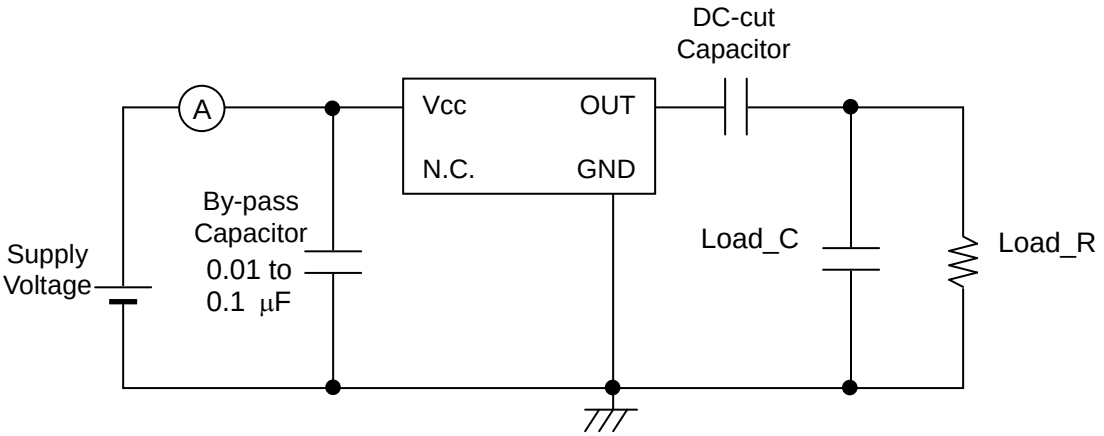

3) Conditions

1. Oscilloscope: Impedance Min. 1MΩ
   Input capacitance Max. 10 pF
   Band width Min. 300 MHz
   Impossible to measure both frequency and wave form at the same time.
   (In case of using oscilloscope's amplifier output, possible to measure both at the same time.)
2. Load_C includes probe capacitance.
3. A capacitor (By-pass:0.01 to 0.1 µF) is placed between Vcc and GND,and closely to TCXO.
4. Use the current meter whose internal impedance value is small.
5. Power Supply
   Impedance of power supply should be as low as possible.
6. GND pin should be connected to low impedance GND.

[7] Outline drawing unit:mm

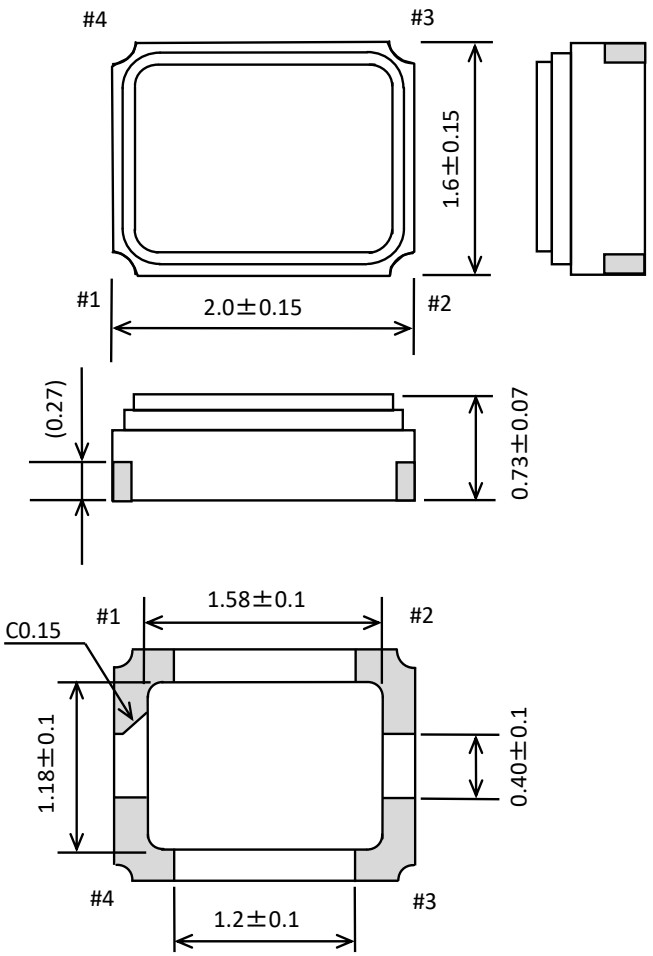

Material
Ceramics(Cavity)
Au plated nickel(Electric terminal)
Fe-Ni-Co(Lid)

[8] Recommended foot print unit:mm

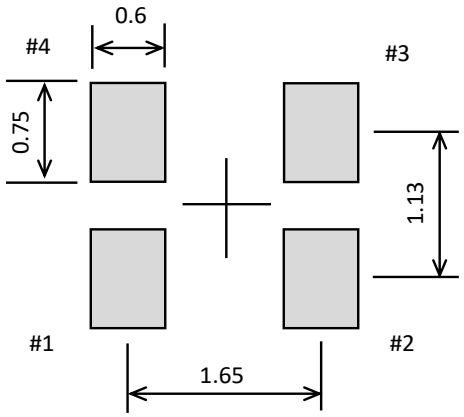

Pin #	Connection
1	N.C.
2	GND
3	OUT
4	Vcc

Do not connect “N.C.” pin with any other leads (also mutually)

To maintain stable operation, provide a 0.01 to 0.1 µF by-pass capacitor at a location as near as possible to the power source terminal of the crystal product (between Vcc - GND).

[9] Reflow profile

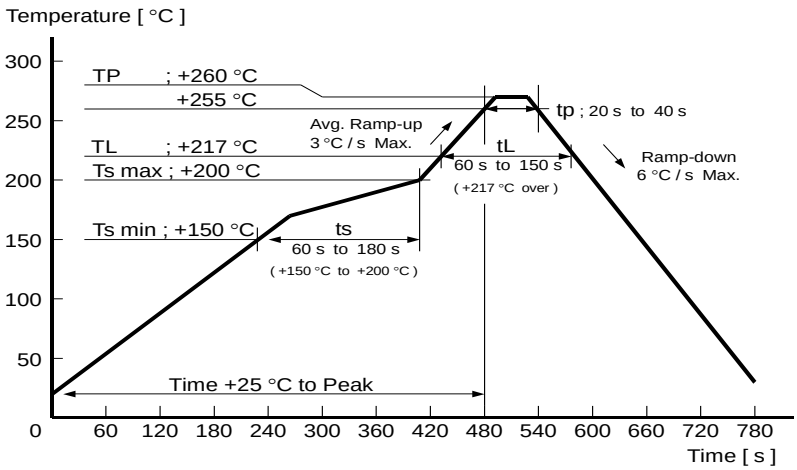

[10] Packing information

1) Product number last 2 digits code(xx) description. The recommended code is "00"

X1G0041310031xx

Code	Condition
00	12000pcs / Reel
01	Any Q'ty vinyl bag(Tape cut)
11	Any Q'ty / Reel
14	1000pcs / Reel
15	2000pcs / Reel
16	3000pcs / Reel

2) Taping specification

Subject to EIA-481 & IEC-60286

(1) Tape dimensions TE0804L

Material of the Carrier Tape : PS

Material of the Top Tape : PET+PE unit:mm

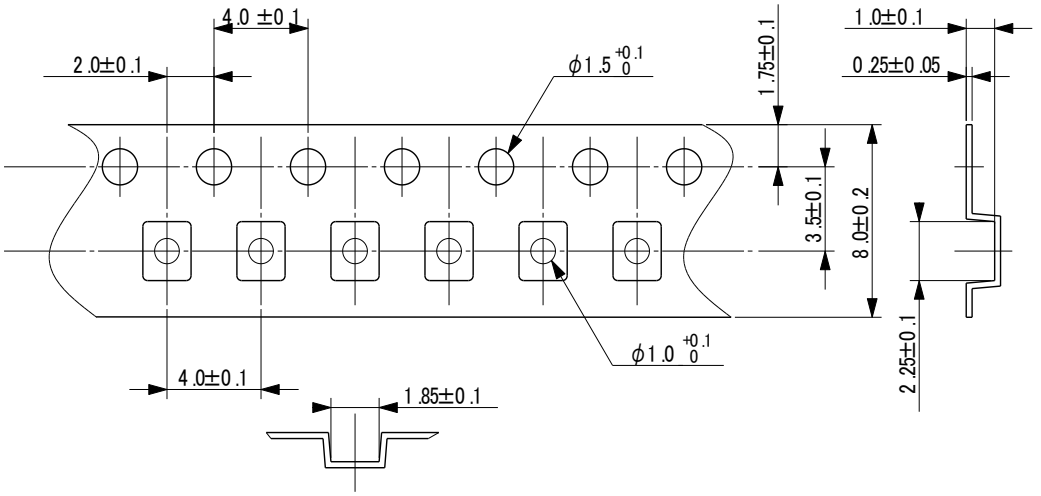

(2) Reel dimensions

Center material : PS

Material of the Reel : PS

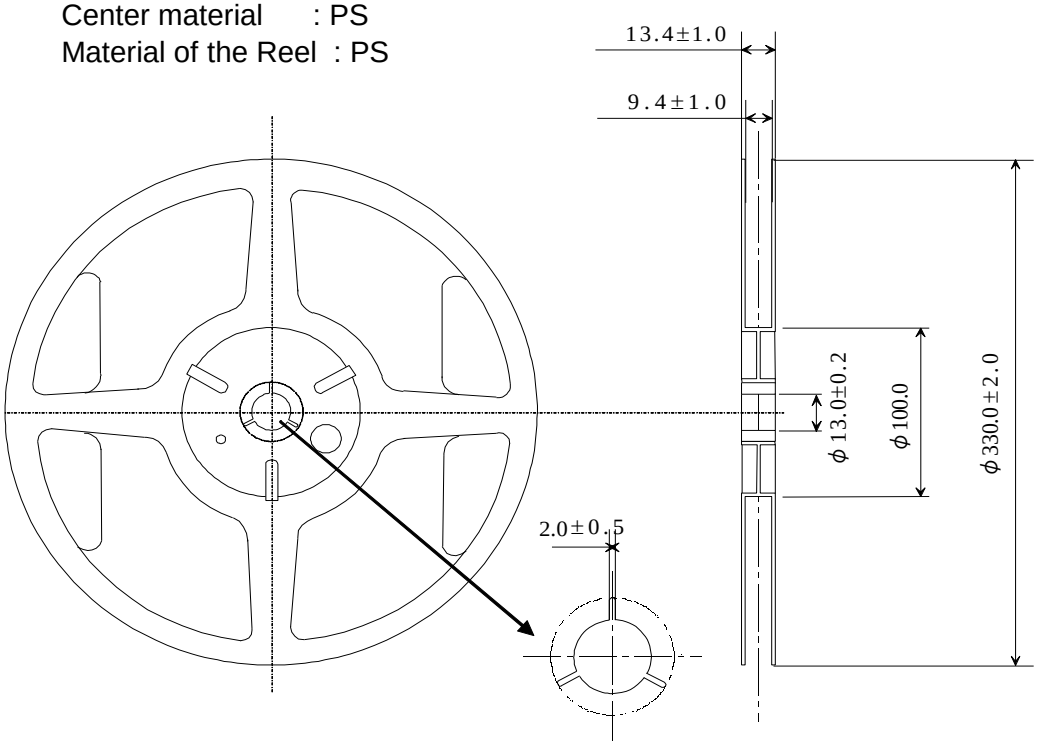

[11] Handling precautions

Prior to using this product, please carefully read the section entitled “Precautions” on our Web site (http://www5.epsondevice.com/en/quartz/tech/precaution/) for instructions on how to handle and use the product properly to ensure optimal performance of the product in your equipment.
Before using the product under any conditions other than those specified therein, please consult with us to verify and confirm that the performance of the product will not be negatively affected by use under such conditions.

In addition to the foregoing precautions, in order to avoid the deteriorating performance of the product, we strongly recommend that you DO NOT use the product under ANY of the following conditions:

(1) Mounting the product on a board using water-soluble solder flux and using the product without removing the residue of the flux completely from the board. The residue of such flux that is soluble in water or water-soluble cleaning agent, especially the residues which contains active halogens, will negatively affect the performance and reliability of the product.
(2) Using the product in any manner that will result in any shock or impact to the product.
(3) Using the product in places where the product is exposed to water, chemicals, organic solvent, sunlight, dust, corrosive gasses, or other materials.
(4) Using the product in places where the product is exposed to static electricity or electromagnetic waves.
(5) Applying ultrasonic cleaning without advance verification and confirmation that the product will not be affected by such a cleaning process, because it may damage the crystal, IC and/or metal line of the product.
(6) Touching the IC surface with tweezers or other hard materials directly.
(7) Using the product under any other conditions that may negatively affect the performance and/or reliability of the product.
(8) Power supply with ripple may cause of incorrect operation or degradation of phase noise characteristics, so please evaluate before use.
(9) Frequency aging is from environmental tests results to the expectation of the amount of the frequency variation. This doesn't guarantee the product-life cycle.
(10) This components used underfill material at the back side of package.
After mounting this components on the board, there’s possibility of IC damage happened by thermal expansion of adhesive, if adhesive will break into between TCXO and the board.
Please do not use adhesive, this will cause oscillation stop in case of IC damaged by adhesive.

Should any customer use the product in any manner contrary to the precautions and/or advice herein, such use shall be done at the customer’s own risk.

[Notice]

- This material is subject to change without notice.
- Any part of this material may not be reproduced or duplicated in any form or any means without the written permission of SeJQo Epson.
- The information about applied data,circuitry, software, usage, etc. written in this material is intended for reference only. SeJQo Epson does not assume any liability for the occurrence of customer damage or infringing on any patent or copyright of a third party.
  This material does not authorize the licensing for any patent or intellectual copyrights.
- When exporting the products or technology described in this material, you should comply with the applicable export control laws and regulations and follow the procedures required by such laws and regulations.
- You are requested not to use the products (and any technical info for the development and/or manufacture of weapon of mass destruction or for other military purposes.
  You are also requested that
  who may use the products for such prohibited purposes.
- These products are intended for general use in electronic equipment. When using them in specific applications that require extremely high reliability, such as the applications stated below, you must obtain permission from SeJQo Epson in advance.
  / Space equipment (artificial satellites, rockets, etc.)
  / Transportation vehicles and related (automobiles, aircraft, trains, vessels, etc.)
  / Medical instruments to sustain life
  / Submarine transmitters
  / Power stations and related
  / Fire work equipment and security equipment
  / Traffic control equipment
  / And others requiring equivalent reliability.

- All brands or product names mentioned herein are trademarks and/or registered trademarks of their respective.

[Contact us]

http://www5.epsondevice.com/en/contact/