Crystal Bridge to the Future

Voltage controlled crystal oscillator

■NV5032SC Data Sheet

5032 size compact VCXO

Application

●Base-stations（5G、4G）



RoHS Compliant
Directive 2011/65/EU
Directive (EU) 2015/863

Pb free

Features

●Dimensions : 5.0 x 3.2mm
●Package : Ceramics
●Low phase noise (122.88MHz) :
Typ. –127dBc/Hz (@1kHz)
Typ. –160dBc/Hz (@100kHz)
●Low phase jitter (122.88MHz) :
Typ. 0.13ps (12kHz ～ 20MHz)
●Low current consumption (122.88MHz) : Typ. 48mA
●Frequency : 122.88MHz
●Output specification : LVPECL

9. Item : Voltage controlled crystal oscillator

10. Type : NV5032SC

11. Nominal Frequency : 122.88 MHz

12. NDK Spec. No. : NSC5435A, NSC5435B

13. Maximum Rating

	Item	Ratings			Notes
		min	max	Units	
1	Supply Voltage	-0.3	+4.5	V	
2	Control Voltage	-0.3	VCC +0.3	V	
3	Storage Temperature Range	-55	+125	°C	

14. Electrical Specification

Unless otherwise specified, measuring condition T= +25°C, VCC= +3.3V, Vcont= +1.65V, RL =50Ω

	Parameters	SYM.	Electrical Spec.				Notes
			min	typ	max	Units	
1	Nominal Frequency	f_{nom}		122.88		MHz	
2	Supply Voltage	V_{CC}	3.135	3.3	3.465	V	
3	Control Voltage	V_{cont}	0	1.65	3.30	V	
4	Load Resistance	R_L		50		Ω	Connect to V_{CC}-2.0V
5	Operating Temp. Range	T_{opr}	-40	+25	+85	°C	NSC5435A
			-40	+25	+105	°C	NSC5435B
6	Current Consumption	I_{CC}		48	65	mA	
7	Overall frequency tolerance	$\Delta f/f_{nom}$	-50		+50	ppm	*1
8	Output	-	LVPECL				
9	Output Voltage	V_{OL}			V_{CC} -1.55	V	
		V_{OH}	V_{CC} -1.1			V	
10	Rise time , Fall time	t_r/t_f			1	ns	20 % to 80 % of waveform
11	Symmetry	SYM	45		55	%	50 % of waveform
12	Start-up Time	t_{su}			10	ms	
13	Frequency Control Range	$\Delta f/f$	+/-100			ppm	V_{cont}=1.65+/-1.65 V
14	Frequency Change Polarity	-	Positive				
15	Phase Noise (at 25 °C)	L(f)		-68		dBc/Hz	at 10 Hz offset frequency
				-97		dBc/Hz	at 100 Hz offset frequency
				-127		dBc/Hz	at 1 kHz offset frequency
				-154		dBc/Hz	at 10 kHz offset frequency
				-160		dBc/Hz	at 100 kHz offset frequency
				-162		dBc/Hz	at 1 MHz offset frequency
16	Phase jitter	-		0.06		ps rms	12 kHz to 20 MHz
17	E/D Function	#2 pin Input			#4 pin Output		#5 pin Output
		High level (70%V_{CC} min.) or Open			Enable		
		Low level (30%V_{CC} max.)			Disable		

Table.1 Supported frequency list

● mark indicates the currently available frequency

	Overall Frequency Tolerance					
Nominal Frequency [MHz]	±50ppm / -40 to +85°C	±50ppm / -40 to +105°C				
122.88	●	●				

Output waveform

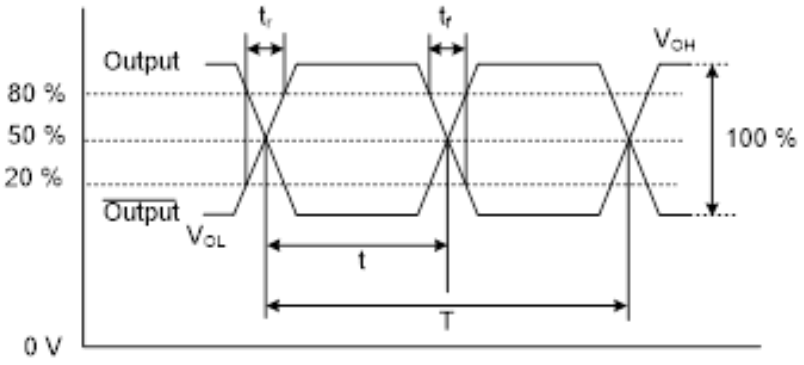

Symmetry= t/T ×100%

Measuring circuits

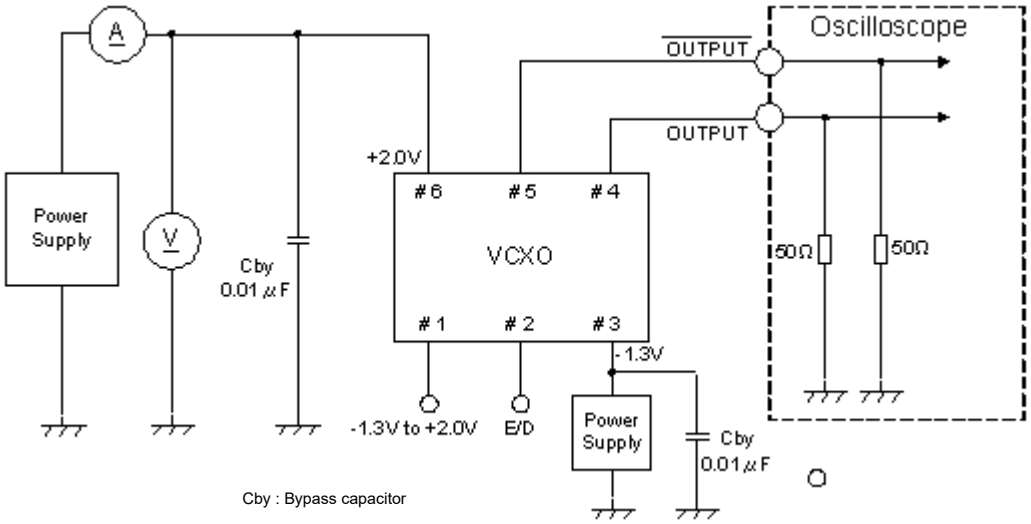

Cby : Bypass capacitor

15. Example For Soldering Conditions
(The below graph corresponds to Pb free solder)

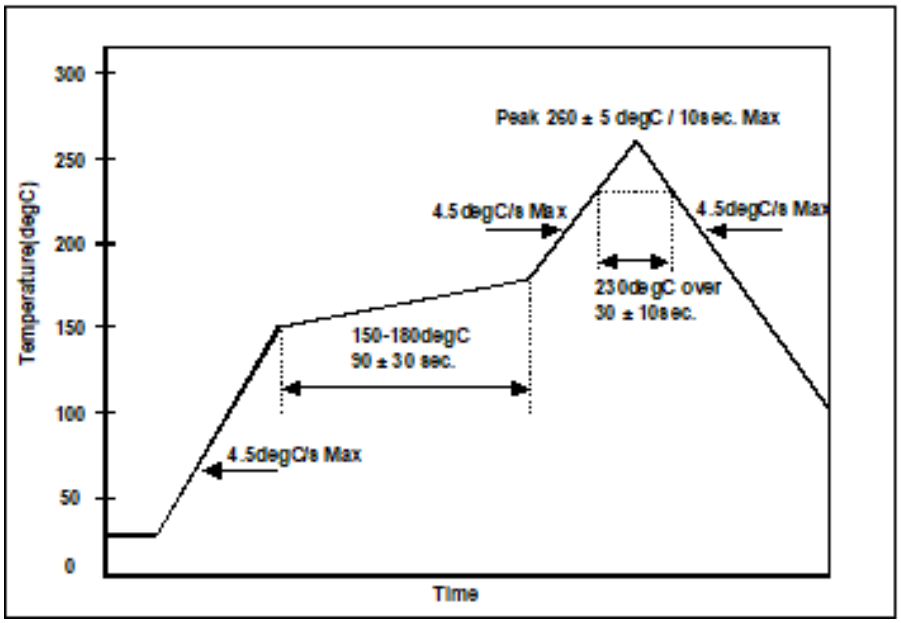

Be sure to use the product under the following conditions. Otherwise, the characteristics deterioration or destruction of the product may result.

(1) Reflow soldering heat resistance
Peak temperature: 265°C, 10 sec
Heating: 230°C or higher, 40 sec
Preheating: 150°C to 180°C, 120 sec
Reflow passage times: 3 times

(2) Manual soldering heat resistance
Pressing a soldering iron of 350°C on the terminal electrode for 3 seconds.

16. Electro Static Discharge

MM: 200V
HBM: 2000V
CDM: 500V

■Dimension of External

Units：mm
Tolerance：0.1mm

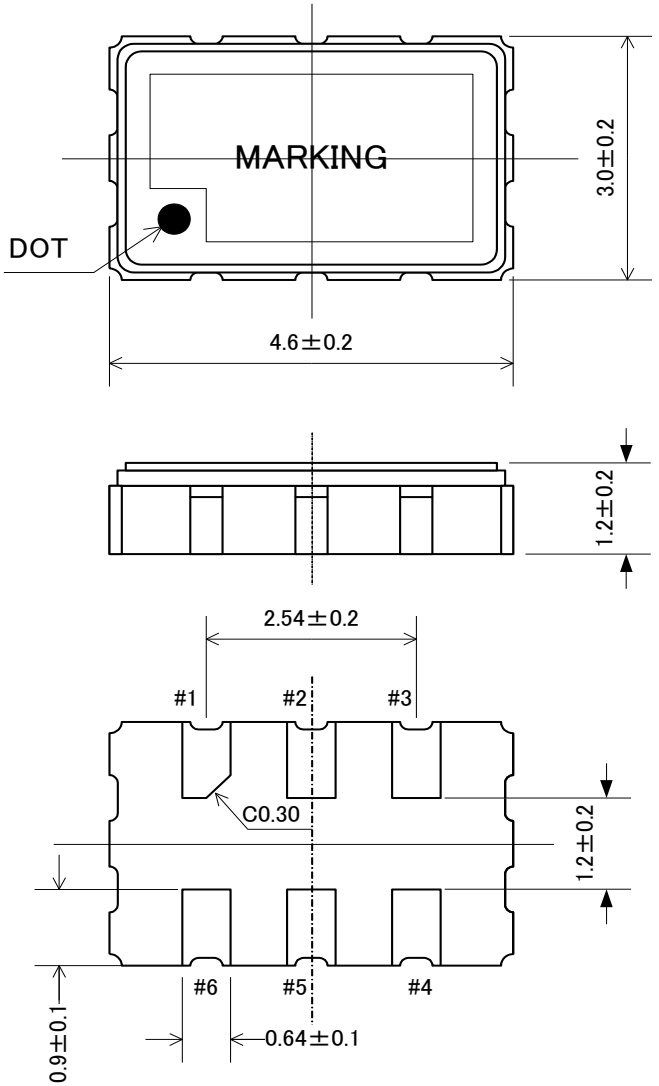

Terminal land connections

#1	VCONT
#2	STAND−BY
#3	GND
#4	OUTPUT
#5	$\overline{\text{OUTPUT}}$
#6	VCC

Land pattern (Recommended)

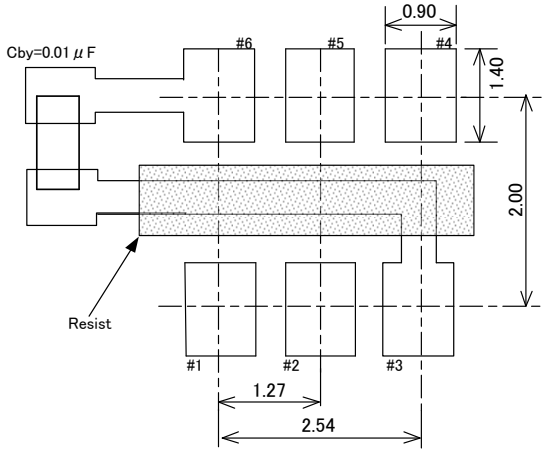

Note) Please reserve a large grand pattern on the PCB where the oscillator is installed.

■Taping and Reel Spec.

1,000 pcs MAX-product Tape

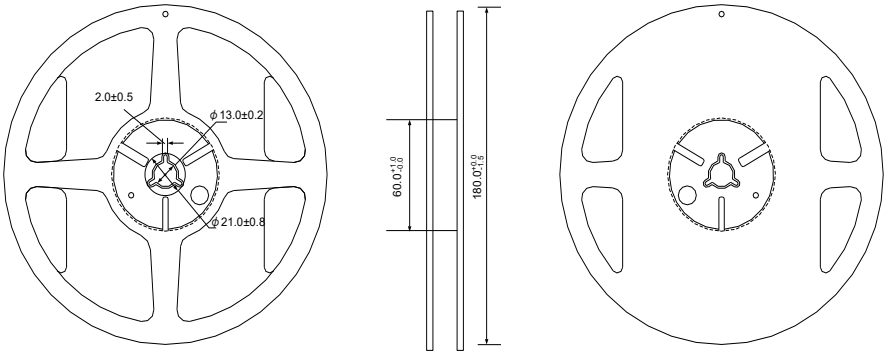

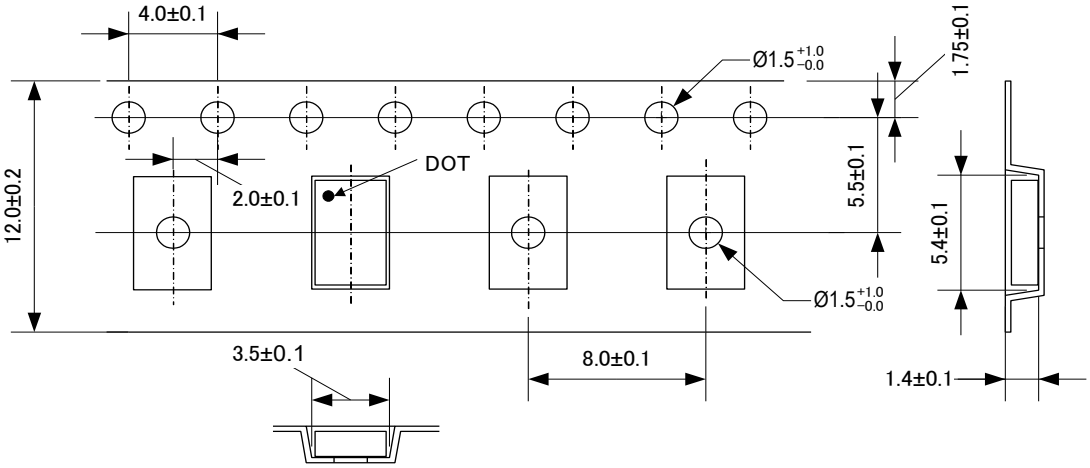

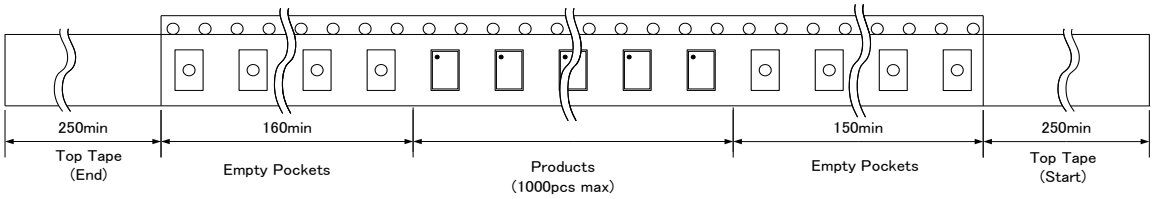

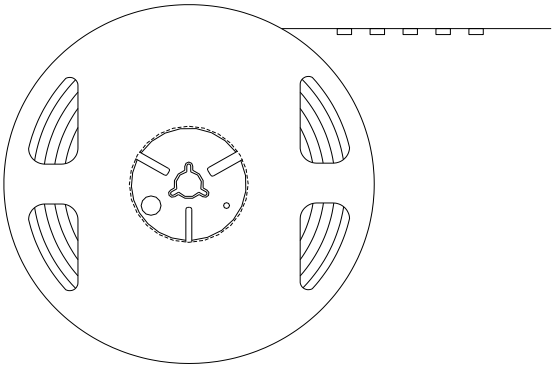

■Marking

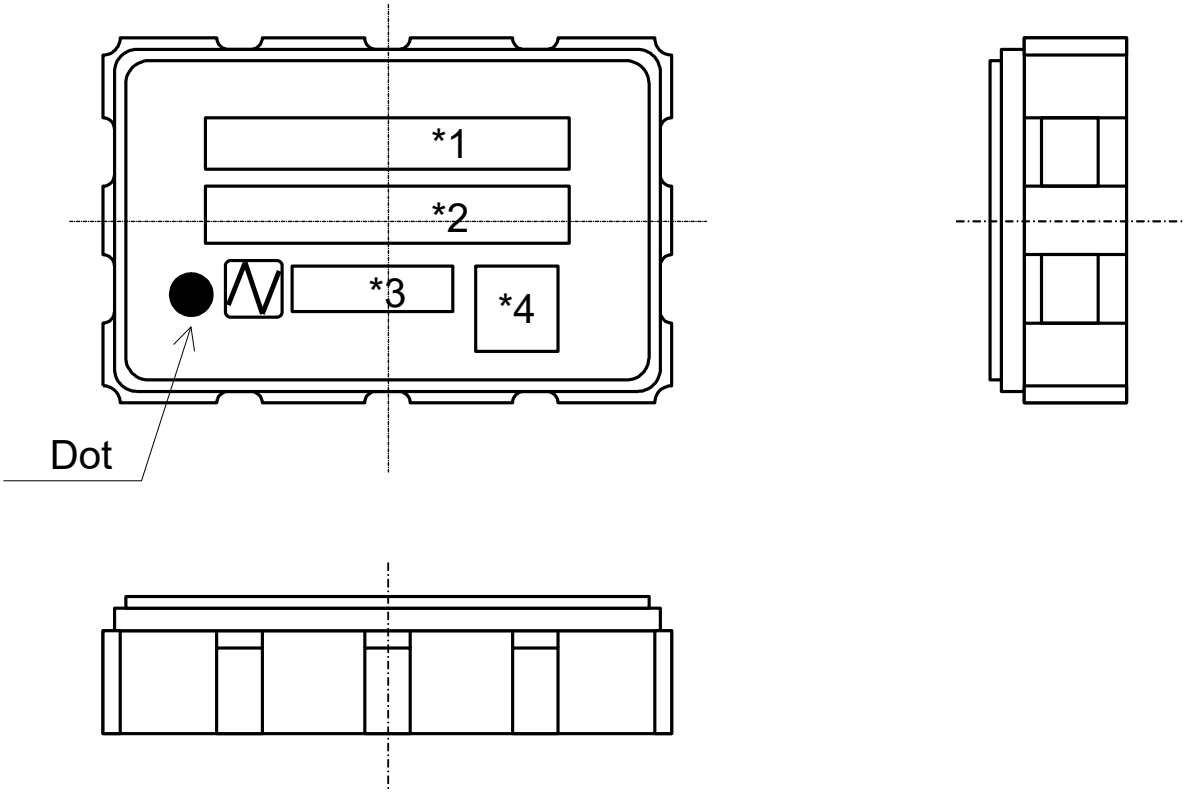

Marking Contents

＊1 Type

＊2 Nominal Frequency

・A unit (MHz) is not written.

＊3 Date code (year and week)

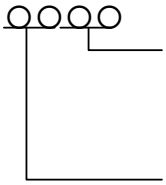

This number shows where the week stands in the year.
The first of a year with no Thursday is not counted one week.

Last 2 figures of A.D. year

＊4 Trace code

*Trace code consist of four digit numbers or letters.

*This code indicates production date and production line number.

■Data

● Frequency Control Range（122.88MHz）

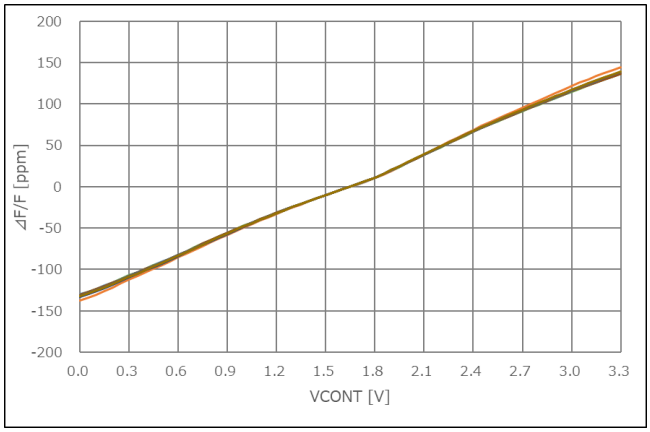

● Frequency/Temperature Characteristics（122.88MHz）

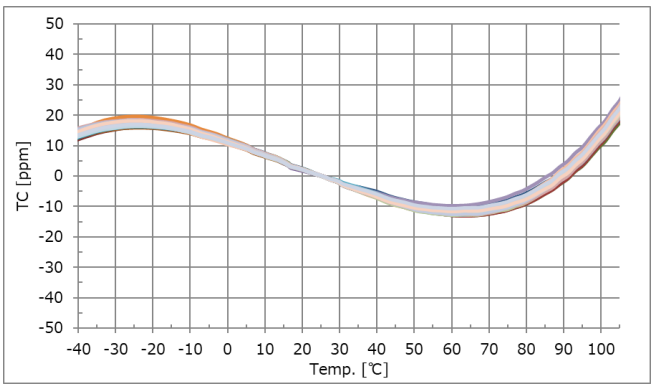

● Phase Noise（122.88MHz）

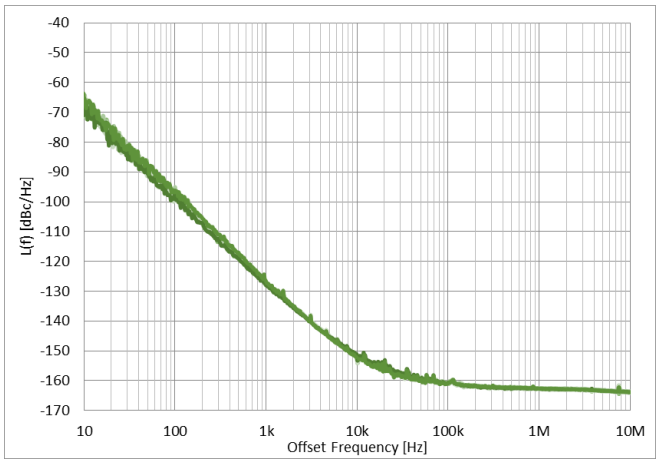

Instruction Notice

1 Noise

When using this product, please insert a bypass capacitor between the power supply and GND. (Closer to the product terminal is desirable.)
The bypass capacitor values shown in our specifications and drawings are for reference only. (They are not guaranteed values.)
In actual use, please select the appropriate bypass capacitor value for your circuit.
NDK shall not be liable for any and all events resulting from or in connection with the use of this product in a manner that does not comply with the above instruction.

2 Resistance to dropping

The NV5032S series is designed to be impactproof so that no damage occurs when dropped a height (75 cm) three times. However, if dropped from a desk etc., it is advisable to check their performance or contact us to check it.

3 Electrostatic protection

The NV5032S series employ C-MOS ICs for the active element. Please use them in static-free environments.

4 Cleaning

Basically, the NV5032S series are applicable for ultrasonic wave cleaning. However, in some case, during ultrasonic wave cleanings, internal design may get damage. Please check condition carefully beforehand.

5 Other

The NV5032S series are C-MOS applied products. And careful handling(same as with C-MOS IC) are Needed to avoid electrostatic problems.
Incorrect PAD connection is cause of trouble. Please make sure to connect correctly as below.

#3 terminal → GND
#6 terminal → V_{CC}

Notes On Use

1 Even if the appearance color etc. of the product differs by purchasing the component parts by more than two companies, there is no influence on the characteristics and reliability.

2 IN THE CASE OF THE FOLLOWING ITEMS, WE ARE NOT RESPONSIBLE FOR WARRANTY / COMPENSATION.

(1) WHEN PRODUCTS OF THIS SPECIFICATION ARE USED FOR EQUIPMENT RELATED TO HUMAN LIFE OR PROPERTY, IT IS THE RESPONSIBILITY OF THE CUSTOMER TO CONFIRM THE INFLUENCE ON THIS PRODUCT AND EQUIPMENT TO BE USED BEFOREHAND, CONDUCT NECESSARY SAFETY DESIGN (INCLUDING REDUNDANT DESIGN, MALFUNCTION PREVENTION DESIGN, etc.), PLEASE USE IT AFTER SECURING SUFFICIENT SAFETY OF EQUIPMENT.

1.SAFETY-RELATED EQUIPMENT SUCH AS AUTOMOBILES, TRAINS, SHIPS, etc., OR EQUIPMENT DIRECTLY INVOLVED IN OPERATION
2.AIRCRAFT EQUIPMENT
3.SPACE EQUIPMENT
4.MEDICAL EQUIPMENT
5.MILITARY EQUIPMENT
6.DISASTER PREVENTION / CRIME PREVENTION EQUIPMENT
7.TRAFFIC LIGHT
8.OTHER EQUIPMENT REQUIRING THE SAME PERFORMANCE AS THE ABOVE-MENTIONED EQUIPMENT

(2) IN CASES WHERE IT IS NOT INDICATED IN THE REQUESTED STANDARD AND IS USED UNDER CONDITIONS OF USE (INCLUDING CIRCUIT MARGIN etc.) THAT CAN NOT BE PREDICTED AT THE PRODUCTION STAGE.

(3) WHEN USING ULTRASONIC WELDING MACHINE.(THERE IS A POSSIBILITY THAT THE CHARACTERISTIC DEGRADATION IS CAUSED BY THE RESONANCE PHENOMENON OF THE PIEZOELECTORIC MATERIAL.(EXAMPLE;CRYSTAL PIECE))
WE WILL NOT TAKE ANY RESPONSIBILITY FOR THE INFLUENCE OF THE CUSTOMERS' PROCESS.
SO, PLEASE SUFFICIENTLY EVALUATE AT A SAMPLE STEP WHEN YOU USE ULTRASONIC WELDING MACHINE.

(4) USING RESIN MOLD MAY AFFECT THE PRODUCT CHARACTERISTIC.
PLEASE MAKE SURE TO TELL OUR SALES CONTACT WHEN YOU USE RESIN MOLD. WE WILL PERFORM INDIVIDUAL CORRESPONDENCE ABOUT A DELIVERY SPECIFICATION AND A EVALUATION METHOD.
IN ADDITION, IF YOU USE RESIN MOLD WITHOUT CONTACTING US, AND CAUSES DAMAGES AGAINST A CUSTOMER OR A THIRD PARTY, WE WILL NOT BE LIABLE FOR THE DAMAGES AND OTHER RESPONSIBILITIES BECAUSE WE CONSIDER IT IS UNDER SELF-RESPONSIBILITY USING RESIN MOLD.
WE WILL NOT TAKE ANY RESPONSIBILITY FOR THE INFLUENCE OF THE CUSTOMERS' PROCESS.
PLEASE EFFICIENTLY EVALUATE AT A SAMPLE STEP WHEN YOU USE RESIN MOLD.

(5) WHEN PERFORMING IMPROPER HANDLING THAT EXCEEDS THE GUARANTEED RANGE.

3 This product can not be used for automotive applications.
We have other products available for automotive applications so please contact us.

Notes on storage

1 When storing the product in high temperature and high humidity condition for a long time, product characteristics (solderability etc.) and packaging condition may be deteriorated. Please store product at temperature + 5 ℃ ~ + 35 ℃, humidity 85 % RH or less. The product is an electronic component, so please do not storage and use, under a dewing state.

2 The product storage deadline is 12 months after delivery in unopened state. Please use within storage deadline. If you exceed storage deadline, please check the product characteristics etc, please use.

Handling of this document and other requests

Please refer to the " Site Guidance" on our website for the handling of information contained in this document. (https://www.ndk.com/en/terms/)