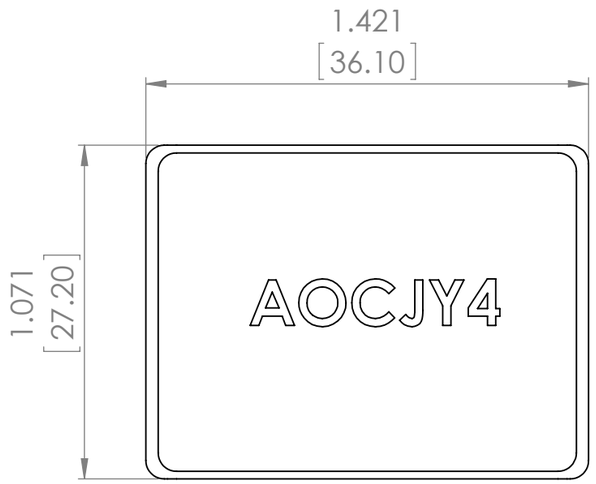

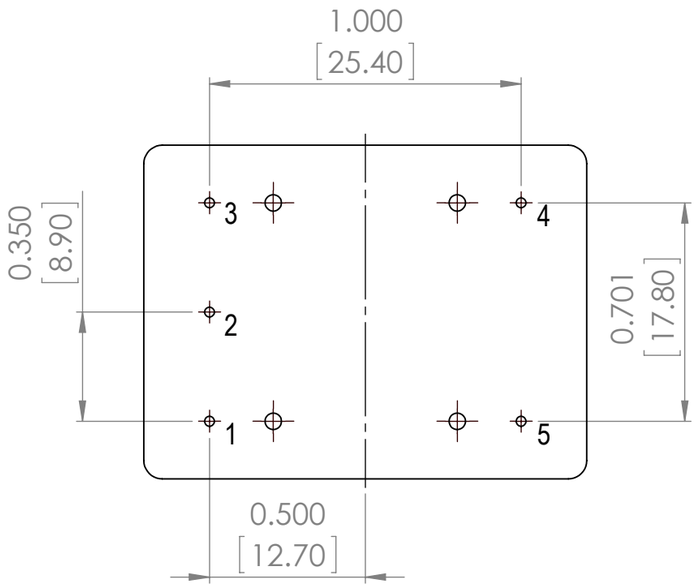

Bottom View

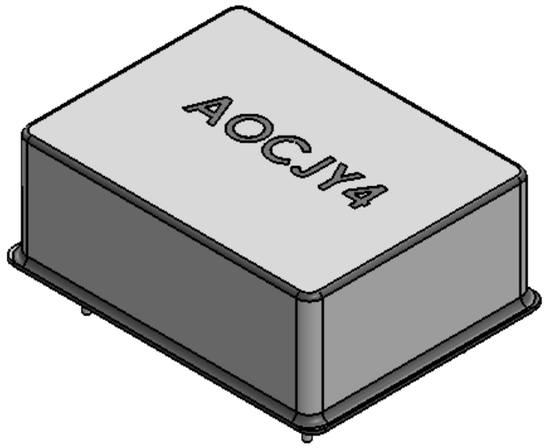

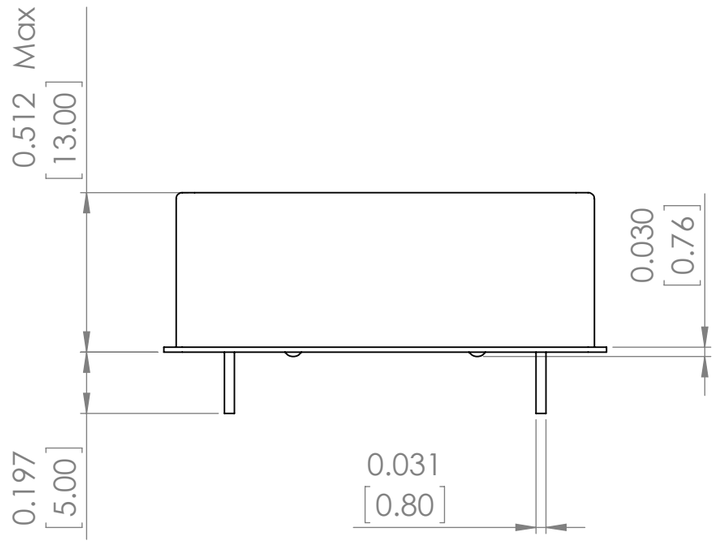

PIN	FUNCTION:
1	Control Voltage/NC
2	Reference Voltage/NC
3	Power Supply
4	R F OUT
5	GND

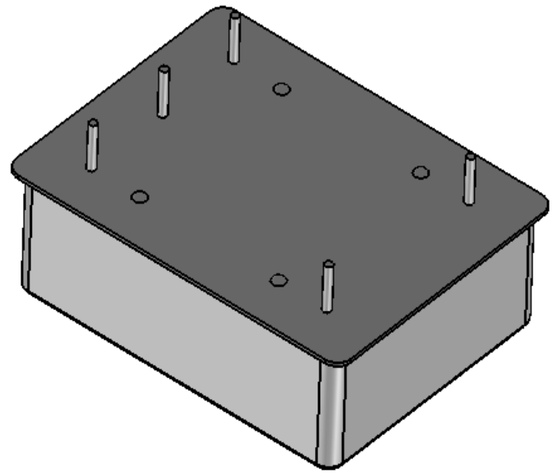

UNLESS OTHERWISE SPECIFIED: DIMENSIONS ARE IN MM SURFACE FINISH: TOLERANCES: LINEAR: ANGULAR:		FINISH:			DEBUR AND BREAK SHARP EDGES	
	NAME	SIGNATURE	DATE			
DRAWN	XXXXXX					
CHK'D	XXXXXX					
APPV'D						
MFG						
Q.A				MATERIAL:		
				WEIGHT:		

DO NOT SCALE DRAWING | REVISION -

ABRACON CORPORATION

30332 Esperanza, Rancho Santa margarita, California 92688

TITLE: OVEN CONTROLLED CRYSTAL OSCILLATOR

DWG NO. AOCJY4 | A3

SCALE:2:1 | SHEET 1 OF 1