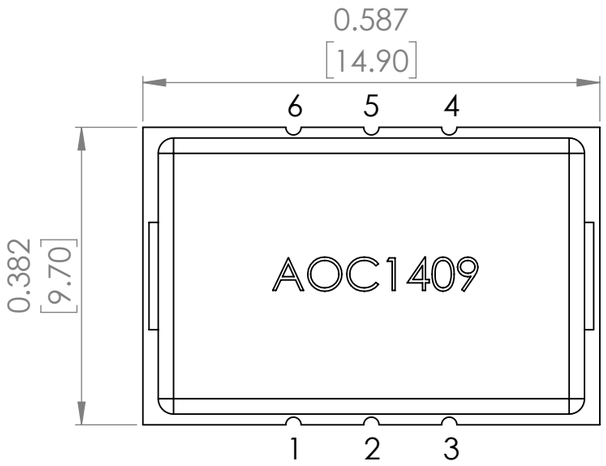

TOP VIEW

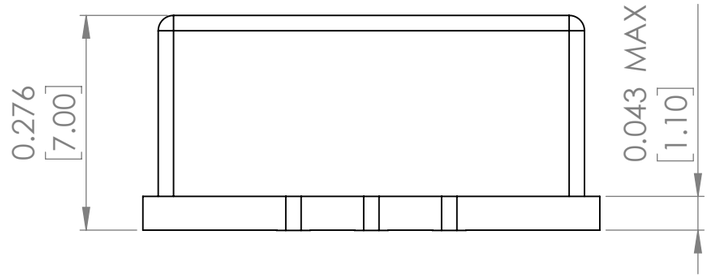

SIDE VIEW

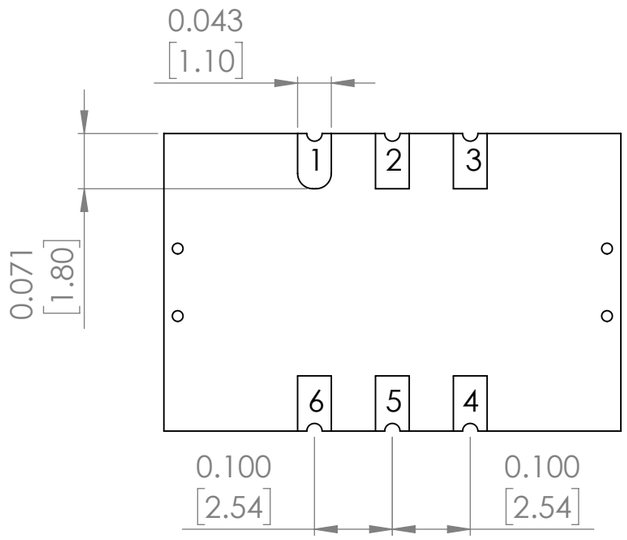

BOTTOM VIEW

RECOMMENDED LAND PATTERN

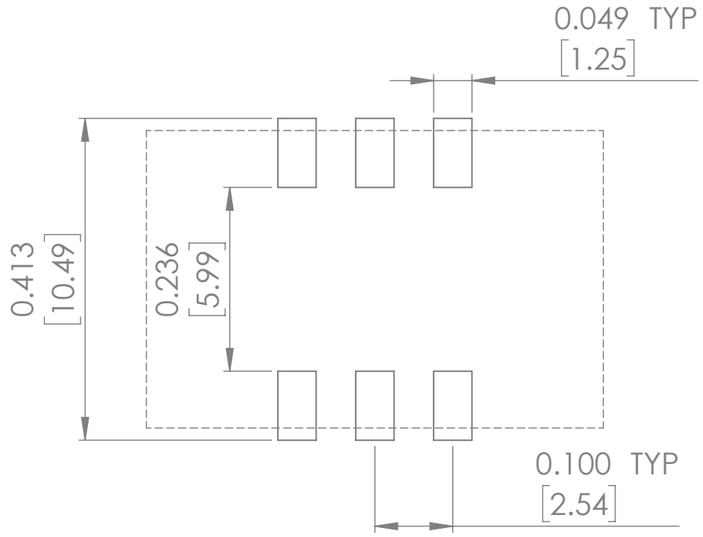

Pin/Pad #	Function
1	Voltage Control (Vc) or N/C
2	Do Not Connect (DNC)*
3	GROUND
4	RF Output
5	Do Not Connect (DNC)*
6	Supply Voltage (Vdd)

*DO NOT Connect *DNC* pads to ground or supply rails

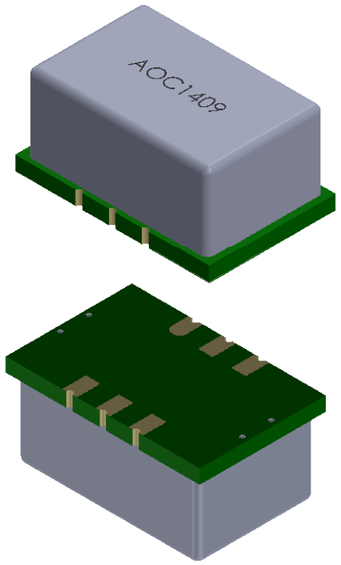

DO NOT SCALE DRAWING | REVISION -

ABRACON LLC
The Power of Linking Together

5101 Hidden Creek Lane, Spicewood Texas-78669

TITLE:

DWG NO. AOC1409 | A3

SCALE: 5:1 | SHEET 1 OF 1