石英晶体谐振器Crystal Resonator
HC-49S & HC-49SS

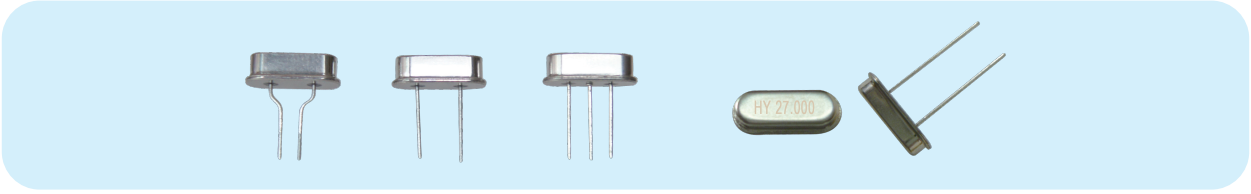

电气参数 ELECTRICAL SPECIFACATIONS

项次 Item	规格 Specification		
频率范围 Frequency Range(MHz)	HC-49S-DIP2	HC-49S-DIP3	HC-49SS-DIP2
	3.200~70.000	3.200~70.000	3.200~70.000
振荡模式 Mode of Oscillation	基频Fundamental(三次泛音 3rd)		
调整频差 Frequency Tolerance (at 25℃)	±20ppm Standard,(±5ppm, ±10ppm, ±30ppm Available)		
温度频差 Frequency Stability Over Temperature	±20ppm Standard,(±10ppm, ±30ppm Available)		
工作温度 Operating Temperature Range	-20℃~+70℃ Standard, -40℃~+85℃ Extended		
储存温度 Storage Temperature Range	-40℃~+120℃		
老化率 Aging (at 25℃)	±3ppm/year Max		
负载电容 Load Capacitance	8PF~32PF or Series		
静态电容 Shunt Capacitance	4.0PF Max		
驱动功率 Drive Level	0.01μw~100μw		
回流焊条件 Reflow Conditions	260℃ for 5s Max, 2 reflows Max		

等效电阻 Equivalent Series Resistance			
频段 \ 型号	HC-49S-DIP2	HC-49S-DIP3	HC-49SS-DIP2
3.2MHz≤Freq.< 3.5MHz	120～100Ω	120～100Ω	120～100Ω
3.5MHz≤Freq.< 5.0MHz	100～80Ω	100～80Ω	100～80Ω
5.0MHz≤Freq.< 8.0MHz	80～60Ω	80～60Ω	80～60Ω
8.0MHz≤Freq.< 12MHz	60～30Ω	60～30Ω	60～30Ω
12MHz≤Freq.< 40MHz	30～25Ω	30～25Ω	30～25Ω
30MHz≤Freq.< 70MHz 3RD	80～60Ω	80～60Ω	80～60Ω

外形尺寸 DIMENSIONS(mm)

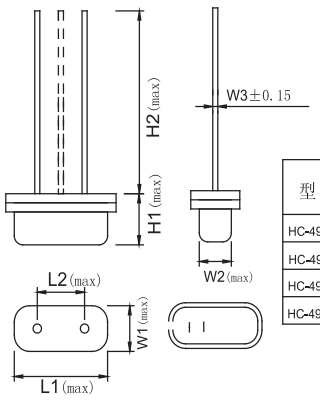

型 号	外形尺寸(mm)						
	L1	L2	W1	W2	W3	H1	H2
HC-49S-DIP2	11.05	4.88	4.5	3.8	0.45	3.5	13.0
HC-49S-DIP3	11.05	4.88	4.5	3.8	0.45	3.5	13.0
HC-49SS-DIP2	11.05	4.88	4.5	3.8	0.45	2.5	13.0
HC-49SSS-DIP2	6.5	2.5	4.0	3.0	0.25	1.7	8.0

回流焊曲线 SODLE REFLOW PROFILE

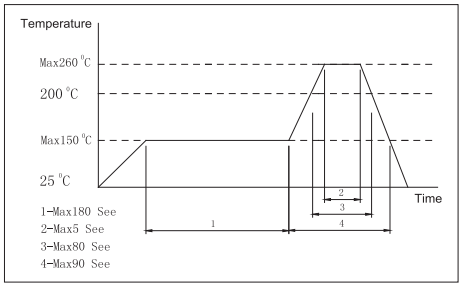

主要参数除以上指标外，可根据用户要求制作特殊规格的产品
Mostly parameter out above guideline, can produce special specifications products according to your requirement.

石英晶体谐振器Crystal Resonator
HC-49S-SMD & HC-49SS-SMD

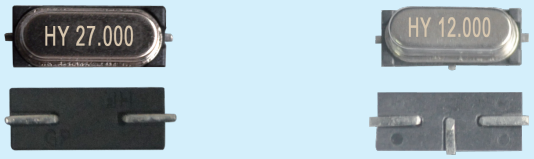

电气参数 ELECTRICAL SPECIFACATIONS

项次 Item	规格 Specification		
频率范围 Frequency Range(MHz)	49S-SMD-2PIN	49S-SMD-3PIN	49SS-SMD-2PIN
	3.200~70.000	3.200~70.000	3.200~70.000
振荡模式 Mode of Oscillation	基频Fundamental(三次泛音 3rd)		
调整频差 Frequency Tolerance (at 25℃)	±20ppm Standard,(±5ppm, ±10ppm, ±30ppm Available)		
温度频差 Frequency Stability Over Temperature	±20ppm Standard,(±10ppm, ±30ppm Available)		
工作温度 Operating Temperature Range	-20℃~+70℃ Standard, -40℃~+85℃ Extended		
储存温度 Storage Temperature Range	-40℃~+120℃		
老化率 Aging (at 25℃)	±3ppm/year Max		
负载电容 Load Capacitance	8PF~32PF or Series		
静态电容 Shunt Capacitance	4.0PF Max		
驱动功率 Drive Level	0.01μw~100μw		
回流焊条件 Reflow Conditions	260℃for 5s Max, 2 reflows Max		

等效电阻 Equivalent Series Resistance			
频段 \ 型号	HC-49S-DIP2	HC-49S-DIP3	HC-49SS-DIP2
3.2MHz≤Freq.< 3.5MHz	120～100Ω	120～100Ω	120～100Ω
3.5MHz≤Freq.< 5.0MHz	100～80Ω	100～80Ω	100～80Ω
5.0MHz≤Freq.< 8.0MHz	80～60Ω	80～60Ω	80～60Ω
8.0MHz≤Freq.< 12MHz	60～30Ω	60～30Ω	60～30Ω
12MHz≤Freq.< 40MHz	30～25Ω	30～25Ω	30～25Ω
30MHz≤Freq.< 70MHz 3RD	80～60Ω	80～60Ω	80～60Ω

外形尺寸 DIMENSIONS(mm)

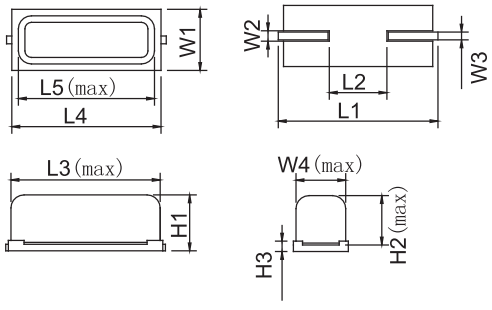

型 号	外形尺寸(mm)											
	L1	L2	L3	L4	L5	W1	W2	W3	W4	H1	H2	H3
HC-49S-SMD2	12.5	4.4	10.2	11.4	11.0	4.7	1.1	0.85	3.8	4.0	3.8	0.8
HC-49S-SMD3	12.5	4.4	10.2	11.4	11.0	4.7	1.1	0.85	3.8	4.0	3.8	0.8
HC-49SS-SMD2	12.5	4.4	10.2	11.4	11.0	4.7	1.1	0.85	3.8	3.0	2.8	0.65

回流焊曲线 SODLE REFLOW PROFILE

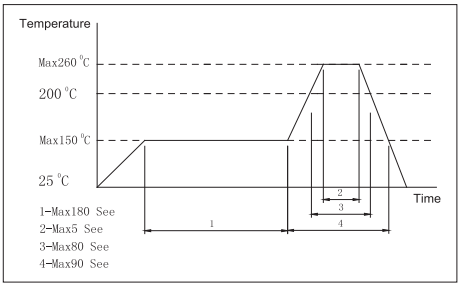

主要参数除以上指标外，可根据用户要求制作特殊规格的产品
Mostly parameter out above guideline, can produce special specifications products according to your requirement.

石英晶体谐振器Crystal Resonator
SMD-4PIN



电气参数 ELECTRICAL SPECIFACATIONS

项次 Item	规格 Specification			
频率范围 Frequency Range(MHz)	SMD5032	SMD3225	SMD2520	SMD2016
	8.000~54.000	12.000~54.000	16.000~54.000	16.000~54.000
振荡模式 Mode of Oscillation	Fundamental			
调整频差 Frequency Tolerance (at 25℃)	±20ppm Standard,(±5ppm, ±10ppm, ±30ppm Available)			
温度频差 Frequency Stability Over Temperature	±20ppm Standard,(±10ppm, ±30ppm Available)			
工作温度 Operating Temperature Range	-20℃~+70℃ Standard, -40℃~+85℃ Extended			
储存温度 Storage Temperature Range	-40℃~+120℃			
老化率 Aging (at 25℃)	±3ppm/year Max			
负载电容 Load Capacitance	8PF~32PF or Series			
静态电容 Shunt Capacitance	4.0PF Max			
驱动功率 Drive Level	0.01μw~100μw			
回流焊条件 Reflow Conditions	260℃for 5s Max, 2 reflows Max			

等效电阻 Equivalent Series Resistance				
频段 \ 型号	SMD5032	SMD3225	SMD2520	SMD2016
8MHz≤Freq.< 12MHz	80~60Ω	-	-	-
12MHz≤Freq.< 16MHz	60~50Ω	60~50Ω	-	-
16MHz≤Freq.< 20MHz	50~40Ω	50~40Ω	80~60Ω	-
20MHz≤Freq.< 40MHz	40~30Ω	40~30Ω	60~50Ω	80~60Ω
40MHz≤Freq.< 54MHz	30~25Ω	30~25Ω	50~40Ω	100~80Ω

外形尺寸 DIMENSIONS(mm)

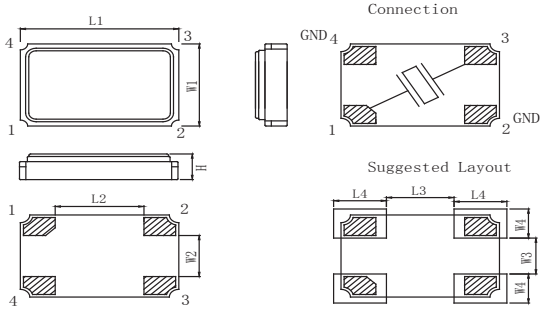

Marking #2and#4 are connected to metal cap of top

型 号	外 形 尺 寸(±0.15mm)								
	L1	L2	L3	L4	W1	W2	W3	W4	H
5032	5.0	3.0	1.2	1.7	3.2	0.9	0.7	1.5	0.9
3225	3.2	1.3	0.8	1.4	2.5	0.7	0.5	1.2	0.7
2520	2.5	0.9	0.6	1.1	2.0	0.6	0.4	1.0	0.5
2016	2.0	0.7	0.5	0.9	1.6	0.5	0.3	0.8	0.5

回流焊曲线 SODLE REFLOW PROFILE

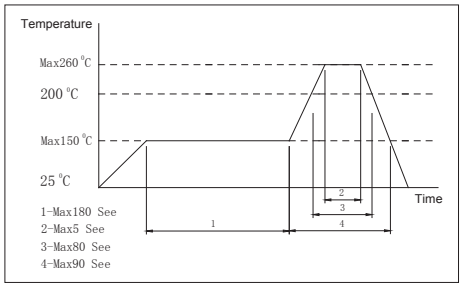

主要参数除以上指标外，可根据用户要求制作特殊规格的产品
Mostly parameter out above guideline, can produce special specifications products according to your requirement.

石英晶体谐振器Crystal Resonator
SMD-2PIN

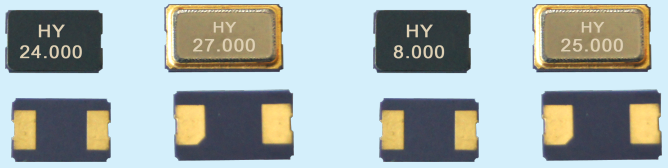

电气参数 ELECTRICAL SPECIFACATIONS

项次 Item	规格 Specification	
频率范围 Frequency Range(MHz)	SMD6035	SMD5032
	8.000~54.000	8.000~54.000
振荡模式 Mode of Oscillation	Fundamental	
调整频差 Frequency Tolerance (at 25℃)	±20ppm Standard,(±5ppm, ±10ppm, ±30ppm Available)	
温度频差 Frequency Stability Over Temperature	±20ppm Standard,(±10ppm, ±30ppm Available)	
工作温度 Operating Temperature Range	-20℃~+70℃ Standard, -40℃~+85℃ Extended	
储存温度 Storage Temperature Range	-40℃~+120℃	
老化率 Aging (at 25℃)	±3ppm/year Max	
负载电容 Load Capacitance	8PF~32PF or Series	
静态电容 Shunt Capacitance	5.0PF Max	
驱动功率 Drive Level	0.01μw~100μw	
回流焊条件 Reflow Conditions	260℃ for 5s Max, 2 reflows Max	

等效电阻 Equivalent Series Resistance

频段 \ 型号	6035	5032
8MHz≤Freq.< 12MHz	100～80Ω	120～80Ω
12MHz≤Freq.< 16MHz	80～60Ω	80～60Ω
16MHz≤Freq.< 20MHz	60～40Ω	60～40Ω
20MHz≤Freq.< 40MHz	30～25Ω	30～25Ω
40MHz≤Freq.< 54MHz	40～30Ω	40～30Ω

外形尺寸 DIMENSIONS(mm)

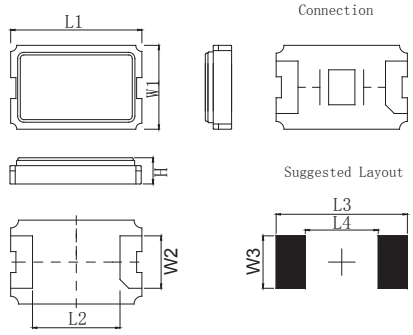

型号	外形尺寸(±0.15mm)							
	L1	L2	L3	L4	W1	W2	W3	H
6035	6.0	3.4	6.2	3.0	6.0	1.8	2.5	1.4
5032	5.0	2.4	5.2	2.5	3.2	1.6	2.0	1.2

回流焊曲线 SODLE REFLOW PROFILE

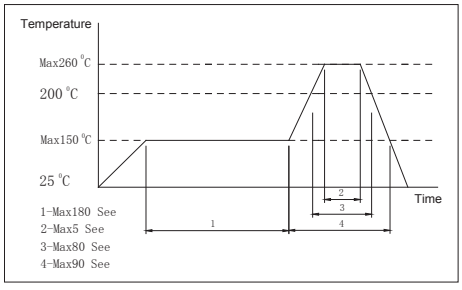

主要参数除以上指标外，可根据用户要求制作特殊规格的产品
Mostly parameter out above guideline, can produce special specifications products according to your requirement.

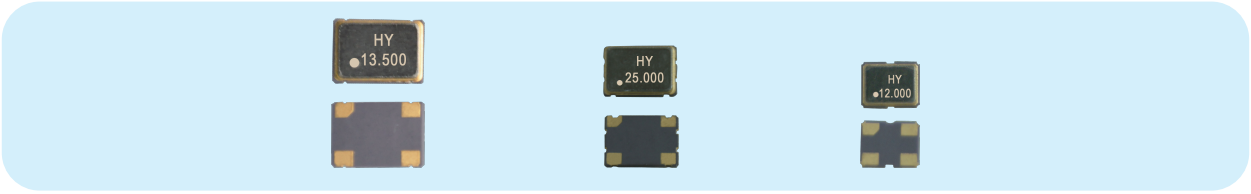

电气参数 ELECTRICAL SPECIFACATIONS

项次 Item		规格 Specification		
参数 Parameter		3.3V	2.5V	1.8V
供给电压 Supply Voltage		3.3V±10％	2.5V±10％	1.8V±10％
频率范围 Frequency Range		1.0~200.0MHz	1.0~166.0MHz	1.0~100.0MHz
频率稳定性 Frequency Stability		±20ppm Standard at 25℃±3℃, ±10ppm~±100ppm available		
供给电流 Supply Current	1.0~30.0 MHz	10mA Max	8mA Max	6mA Max
	30.0~75.0 MHz	15mA Max	10mA Max	8mA Max
	75.0~133.0 MHz	20mA Max	15mA Max	12mA Max
	133.0~166.0 MHz	22mA Max	15mA Max	--
	166.0~200.0 MHz	25mA Max	--	--
工作温度 Operating Temperature		-20℃~+70℃ Standard, -40℃~+85℃ Available		
储存温度 Storage Temperature		-55℃~+125℃		
占空比 Duty Cycle		45%~55%		
输出电压高 Output High (Logic “1”)		90VDD% Min		
输出电压低 Output How (Logic “0”)		10VDD% Max		
启动时间 Start Time		< 10mS		
待机电流 Standby Current		< 15μA		
老化率 Aging (at 25℃)		±3ppm/year Max		

外形尺寸 DIMENSIONS(mm)

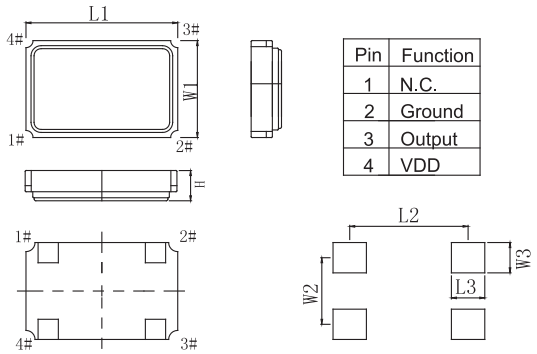

Pin	Function
1	N.C.
2	Ground
3	Output
4	VDD

型 号	外 形 尺 寸(±0.15mm)						
	L1	L2	L3	W1	W2	W3	H
7050	7.0	5.0	2.1	5.0	4.2	2.1	1.8
5032	5.0	2.5	1.2	3.2	2.2	1.2	1.5
3225	3.2	1.8	0.8	2.5	1.6	0.8	1.1

回流焊曲线 SODLE REFLOW PROFILE

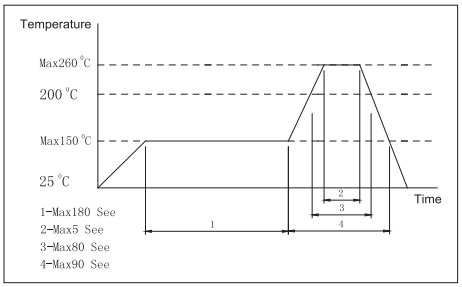

主要参数除以上指标外，可根据用户要求制作特殊规格的产品
Mostly parameter out above guideline, can produce special specifications products according to your requirement.



电气参数 ELECTRICAL SPECIFACATIONS

项次 Item		规格 Specification	
参数 Parameter		3.3V	5.0V
供给电压 Supply Voltage		3.3V±10％	5.0V±10％
频率范围 Frequency Range		250KHz~150.0MHz	
频率稳定性 Frequency Stability		±20ppm(Standard)at 25℃±3℃, ±10ppm~±100ppm available	
供给电流 Supply Current	0.500~23.999 MHz	15mA Max	20mA Max
	24.000~44.999 MHz	20mA Max	30mA Max
	50.000~69.999 MHz	30mA Max	40mA Max
	70.000~150.000MHz	45mA Max	60mA Max
工作温度 Operating Temperature		-20℃~+70℃ Standard, -40℃~+85℃ Available	
储存温度 Storage Temperature		-55℃~+125℃	
占空比 Duty Cycle		40%~60%	
输出电压高 Output High (Logic “1”)		90VDD% Min	
输出电压低 Output How (Logic “0”)		10VDD% Max	
启动时间 Start Time		< 10mS	
待机电流 Standby Current		< 15μA	
老化率 Aging (at 25±3℃)		±3ppm/year Max	

外形尺寸 DIMENSIONS(mm)

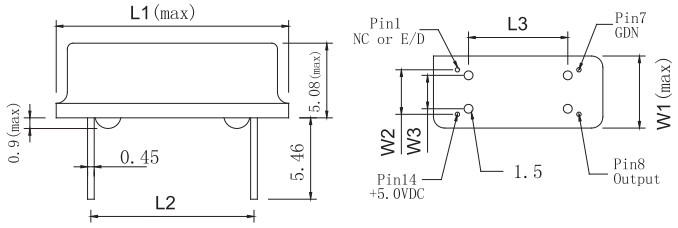

型 号	外形尺寸(±0.15mm)					
	L1	L2	L3	W1	W2	W3
振荡器-PIN14-DIP	20.8	15.24	12.10	13.08	7.62	4.53
振荡器-PIN8-DIP	13.08	7.62	7.62	13.08	7.62	4.53

回流焊曲线 SODLE REFLOW PROFILE

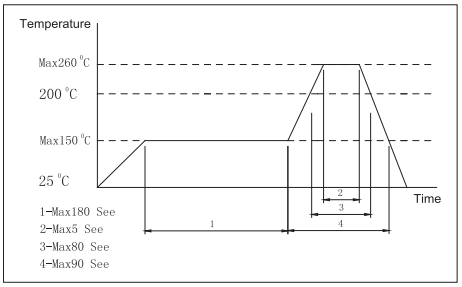

主要参数除以上指标外，可根据用户要求制作特殊规格的产品
Mostly parameter out above guideline, can produce special specifications products according to your requirement.

石英晶体谐振器Crystal Resonator
HC-49SB-DIP & HC-49SB-SMD



电气参数 ELECTRICAL SPECIFACATIONS

项次 Item	规格 Specification	
频率范围 Frequency Range(MHz)	HC-49SB-DIP2	HC-49SB-SMD-2PIN
	12.000~40.000	12.000~40.000
振荡模式 Mode of Oscillation	Fundamental & Third Overtone	
调整频差 Frequency Tolerance (at 25℃)	±20ppm Standard,(±5ppm, ±10ppm, ±30ppm Available)	
温度频差 Frequency Stability Over Temperature	±20ppm Standard,(±10ppm, ±30ppm Available)	
工作温度 Operating Temperature Range	-20℃~+70℃ Standard, -40℃~+85℃ Extended	
储存温度 Storage Temperature Range	-40℃~+120℃	
老化率 Aging (at25℃)	±3ppm/year Max	
负载电容 Load Capacitance	8PF~32PF or Series	
静态电容 Shunt Capacitance	4.0PF Max	
驱动功率 Drive Level	0.01μw~100μw	
回流焊条件 Reflow Conditions	260℃ for 5s Max, 2 reflows Max	

等效电阻 Equivalent Series Resistance

频段 \ 型号	HC-49SB-DIP2	HC-49SB-SMD-2PIN
16MHz≤Freq.＜ 40MHz	80～60Ω	80～60Ω

外形尺寸 DIMENSIONS(mm)

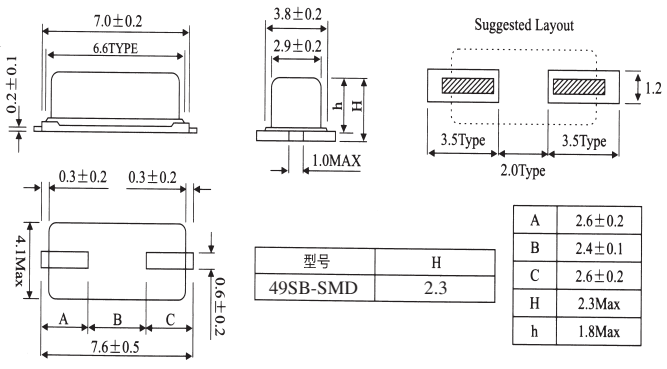

型号	H
49SB-SMD	2.3

A	2.6±0.2
B	2.4±0.1
C	2.6±0.2
H	2.3Max
h	1.8Max

回流焊曲线 SODLE REFLOW PROFILE

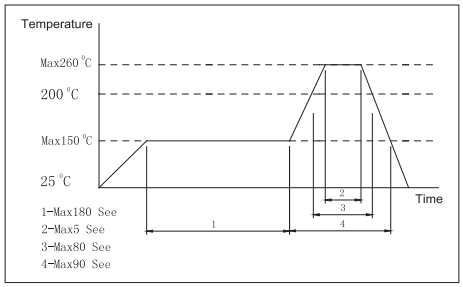

主要参数除以上指标外，可根据用户要求制作特殊规格的产品
Mostly parameter out above guideline, can produce special specifications products according to your requirement.



电气参数 ELECTRICAL SPECIFACATIONS

项次 Item	规格 Specification			
频率范围 Frequency Range(MHz)	HC-49U	HC-49T	UM-1	UM-5
	1.8432~315	10.7~315	10.7~315	10.7~40
振荡模式 Mode of Oscillation	基频Fundamental(三次泛音 3rd,五次泛音 5rd，七次泛音 7rd)			
调整频差 Frequency Tolerance (at 25℃)	±20ppm Standard,(±5ppm, ±10ppm, ±30ppm Available)			
温度频差 Frequency Stability Over Temperature	±20ppm Standard,(±10ppm, ±30ppm Available)			
工作温度 Operating Temperature Range	-20℃~+70℃ Standard,-40℃~+85℃ Extended			
储存温度 Storage Temperature Range	-40℃~+120℃			
老化率 Aging (at 25℃)	±3ppm/year Max			
负载电容 Load Capacitance	8PF~32PF or Series			
静态电容 Shunt Capacitance	5.0PF Max			
驱动功率 Drive Level	0.01μw~100μw			
回流焊条件 Reflow Conditions	260℃ for 5s Max, 2reflows Max			

等效电阻 Equivalent Series Resistance				
频段 / 型号	HC-49U	HC-49T	UM-1	UM-5
1.8432MHz≤Freq.＜ 3.0MHz	300～150Ω	-	-	-
3.0MHz≤Freq.＜6.0MHz	150～60Ω	-	-	-
6.0MHz≤Freq.＜12.0MHz	60～40Ω	-	-	-
12.0MHz≤Freq.＜4OMHz	40～25Ω	40～25Ω	40～25Ω	40～25Ω-
30MHz≤Freq.＜315MHz7RD	40～120Ω	40～120Ω	40～120Ω	-

外形尺寸 DIMENSIONS(mm)

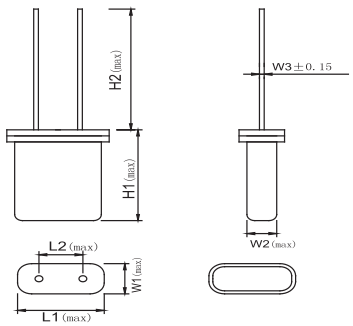

型号	外形尺寸(±0.15mm)						
	L1	L2	W1	W2	W3	H1	H2
HC-49U	11.2	4.88	4.7	3.4	0.45	13.5	12.7
HC-49T	11.2	4.88	4.7	3.4	0.45	11.2	12.7
UM-1	7.0	3.8	3.0	2.2	0.30	8.0	12.7

回流焊曲线 SODLE REFLOW PROFILE

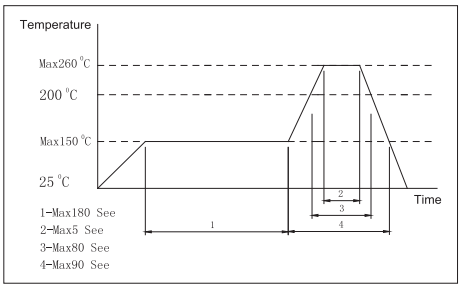

主要参数除以上指标外，可根据用户要求制作特殊规格的产品
Mostly parameter out above guideline, can produce special specifications products according to your requirement.



电气参数 ELECTRICAL SPECIFACATIONS

项次 Item	规格 Specification			
频率范围 Frequency Range(KHz)	AT308	AT206	SMD3215	SMD7015
	32.000~150.000	32.000~75.000	32.768	32.768
振荡模式 Mode of Oscillation	Fundamental			
调整频差 Frequency Tolerance (at 25℃)	±20ppm Standard,(±5ppm, ±10ppm, ±30ppm Available)			
温度频差 Frequency Stability Over Temperature	±30ppm Standard,(±20ppm Available)			
工作温度 Operating Temperature Range	-20℃~+70℃ Standard,-40℃~+85℃ Extended			
储存温度 Storage Temperature Range	-40℃~+120℃			
老化率 Aging (at 25℃)	±3ppm/year Max			
负载电容 Load Capacitance	6PF;12.5PF; 20PF			
静态电容 Shunt Capacitance	5.0PF Max			
驱动功率 Drive Level	0.01μw~100μw			
回流焊条件 Reflow Conditions	240℃ for 5s Max, 2 reflows Max			

等效电阻 Equivalent Series Resistance

频段 \ 型号	DT308	DT206	HY3215	HY7015
32KHz≤Freq.＜150KHz	30～25KΩ	35～30KΩ	-	
32.768KHz	-	-	70 KΩ	65KΩ

外形尺寸 DIMENSIONS(mm)

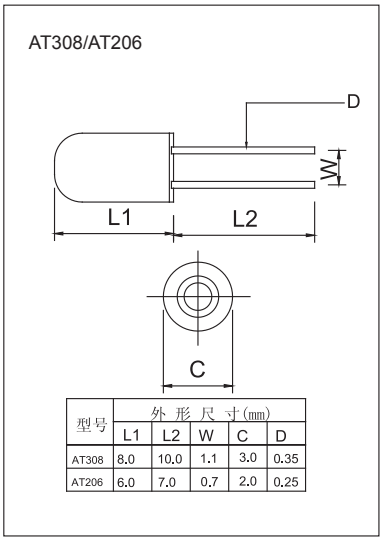

型号	外形尺寸(mm)				
	L1	L2	W	C	D
AT308	8.0	10.0	1.1	3.0	0.35
AT206	6.0	7.0	0.7	2.0	0.25

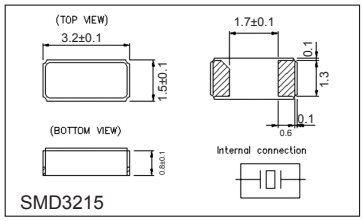

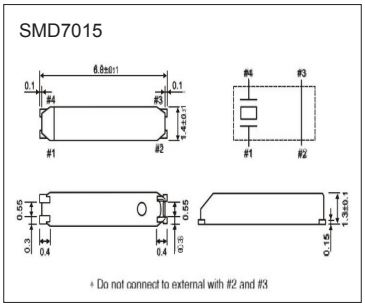

回流焊曲线 SODLE REFLOW PROFILE

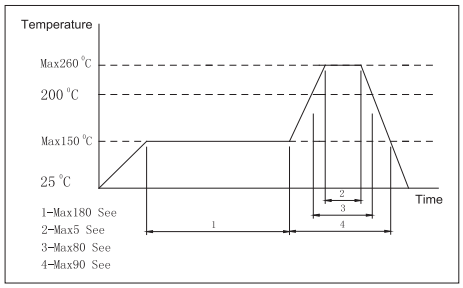

主要参数除以上指标外，可根据用户要求制作特殊规格的产品
Mostly parameter out above guideline, can produce special specifications products according to your requirement.

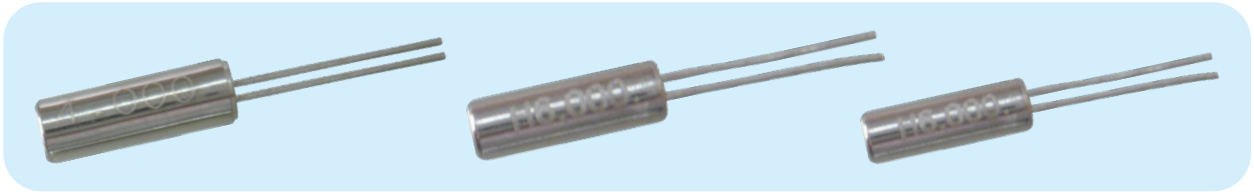

电气参数 ELECTRICAL SPECIFACATIONS

项次 Item	规格 Specification		
频率范围 Frequency Range(MHz)	AT309	AT308	AT206
	3.579~4.000	4.000~48.000	6.000~36.000
振荡模式 Mode of Oscillation	Fundamental & Third Overtone		
调整频差 Frequency Tolerance (at 25℃)	±20ppm Standard,(±5ppm, ±10ppm, ±30ppm Available)		
温度频差 Frequency Stability Over Temperature	±30ppm Standard,(±20ppm Available)		
工作温度 Operating Temperature Range	-20℃~+70℃ Standard, -30℃~+75℃ Extended		
储存温度 Storage Temperature Range	-40℃~+120℃		
老化率 Aging (at 25℃)	±3ppm/year Max		
负载电容 Load Capacitance	8PF~32PF or Series		
静态电容 Shunt Capacitance	5.0PF Max		
驱动功率 Drive Level	0.01μw~100μw		
回流焊条件 Reflow Conditions	260℃ for 5s Max, 2 reflows Max		

等效电阻 Equivalent Series Resistance			
频段 \ 型号	AT309	AT308	AT206
3.579MHz≤Freq.＜4.0MHz	200～120Ω	-	-
4.0MHz≤Freq.＜6.0MHz	-	120～100Ω-	--
6.0MHz≤Freq.＜12.0MHz	-	100～60Ω	150～60Ω
12.0MHz≤Freq.＜4OMHz	-	60～40Ω	60～35Ω

外形尺寸 DIMENSIONS(mm)

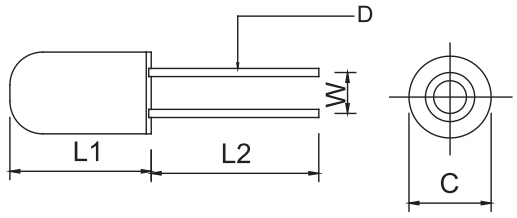

型号	外 形 尺 寸(mm)				
	L1	L2	W	C	D
AT309	9.0	10.0	1.1	3.0	0.35
AT308	8.0	10.0	1.1	3.0	0.35
AT206	6.0	7.0	0.7	2.0	0.25

回流焊曲线 SODLE REFLOW PROFILE

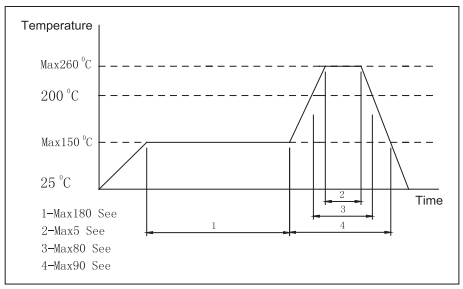

主要参数除以上指标外，可根据用户要求制作特殊规格的产品
Mostly parameter out above guideline, can produce special specifications products according to your requirement.

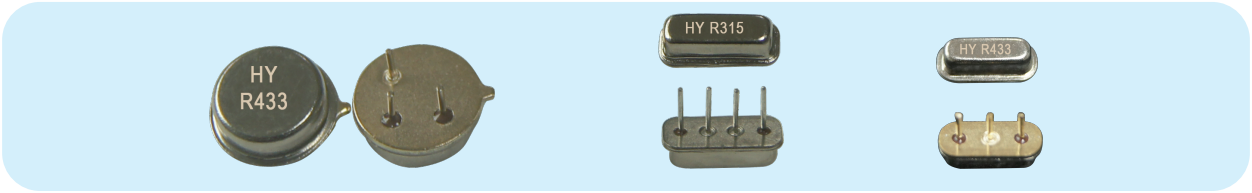

电气参数 ELECTRICAL SPECIFACATIONS

项次 Item	规格 Specification		
频率范围 Frequency Range(MHz)	TO39	F11	D11
	224.500~915.00	224.500~915.00	224.500~915.00
调整频差 Frequency Tolerance (at 25℃)	±75KHz Standard, (±150KHz, ±50KHz Available)		
直流电压 DC Voltage VDC	10V		
交流电压 AC Voltage Vpp	10V 50Hz / 60Hz		
工作温度 Operating Temperature Range	-40℃~+85℃		
储存温度 Storage Temperature Range	-55℃~+125℃		
插入损耗 Insertion Loss（dB）	2.5		
绝缘电阻 DC. Insulation Resistance	1MΩ		
静态电容 Shunt Capacitance	< 2.8 PF		
老化率 Aging (at 25℃)	10ppm/year Max		
回流焊条件 Reflow Conditions	260℃ for 5s Max, 2 reflows Max		

外形尺寸 DIMENSIONS(mm)

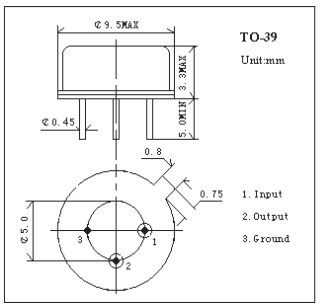

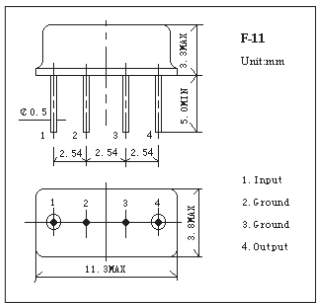

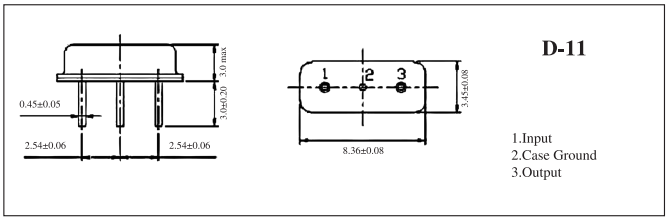

回流焊曲线 SODLE REFLOW PROFILE

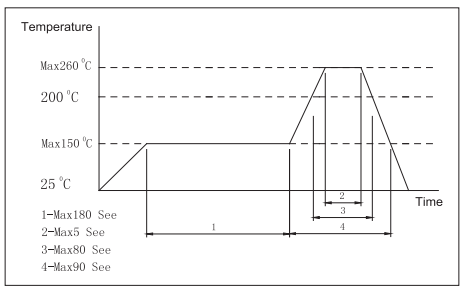

主要参数除以上指标外，可根据用户要求制作特殊规格的产品
Mostly parameter out above guideline, can produce special specifications products according to your requirement.

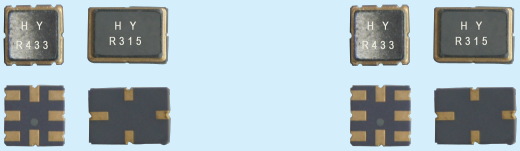

电气参数 ELECTRICAL SPECIFACATIONS

项次 Item	规格 Specification		
频率范围 Frequency Range(MHz)	HYS55	HYS53	HYS39
	300.000~927.00	300.000~927.00	300.000~927.00
调整频差 Frequency Tolerance (at 25℃)	±75KHz Standard, (±150KHz, ±50KHz Available)		
直流电压 DC Voltage VDC	10V		
交流电压 AC Voltage Vpp	10V 50Hz / 60Hz		
工作温度 Operating Temperature Range	-20℃~+70℃ Standard, -40℃~+85℃ Extended		
储存温度 Storage Temperature Range	-40℃~+120℃		
插入损耗 Insertion Loss（dB）	2.5		
绝缘电阻 DC. Insulation Resistance	1MΩ		
静态电容 Shunt Capacitance	2.8PF		
老化率 Aging (at 25℃)	10ppm/year Max		
回流焊条件 Reflow Conditions	260℃For 5sMax, 2Reflows Max		

外形尺寸 DIMENSIONS(mm)

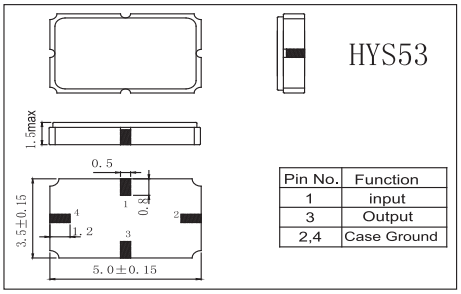

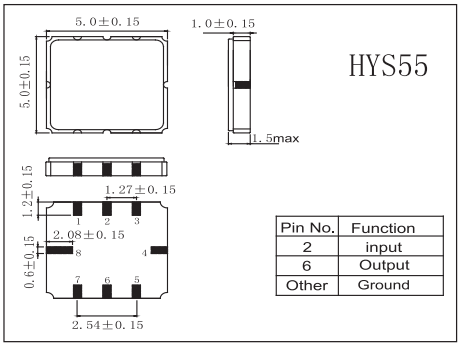

回流焊曲线 SODLE REFLOW PROFILE

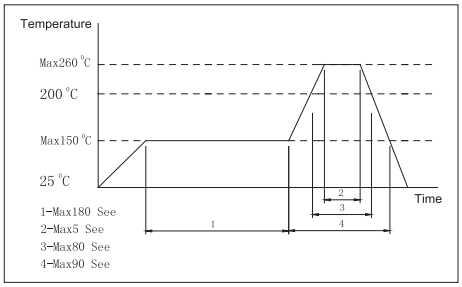

主要参数除以上指标外，可根据用户要求制作特殊规格的产品
Mostly parameter out above guideline, can produce special specifications products according to your requirement.