Specification No.	---

Messrs.

(first / ~~revised~~)

Delivery Specification

Product Number : Quartz Crystal Unit SC-12S

Product spec. & Item code :

Product spec.	Item code	
32.768kHz ± 20ppm / 12.5 pF	Q-SC12S03220C5AAAN	
32.768kHz ± 20ppm / 9.0 pF	Q-SC12S0322090AAAN	
32.768kHz ± 20ppm / 7.0 pF	Q-SC12S0322070AAAN	
32.768kHz ± 20ppm / 6.0 pF	Q-SC12S0322060AAAN	

The number of copies : 1 copy

Date of Registration : 6-Sep-2021 (v1)

Receipt	Remark

〈NOTICE〉

1. Advance agreement will be needed before changing any contents of the specification herein.

2. Provided that the information herein is subject to change, only revised pages shall be reissued.

3. When the product described herein includes Regulated Products subject The Wassenaar Arrangement etc., they may not be exported without authorization from the appropriate governmental authorities.

4. The contents of this specification including all figures and illustrations are proprietary information (copyright or know-how) of Seiko Instruments Inc. It is strictly prohibited to copy all or part of these specifications to third parties without permission.

5. In the case that the products described herein are used as part of any devices or equipment which might influence any one of the human body, human life and property, such as physical exercise equipment, medical equipment or vehicles, please let us know that.

Seiko Instruments Inc.
Electronic Components Sales Office
1-8, Nakase, Mihama ku, Chiba shi, Chiba 261-8507 Japan

SII Crystal Technology Inc.
Engineering Dept.
1110, Hirai cho, Tochigi shi, Tochigi 328-0054 Japan

Approved by QA

Specifications

1. Scope

These specifications apply to QUARTZ CRYSTAL RESONATORS (hereinafter referred to as RESONATORS) to be manufactured by Seiko Instruments Inc. (hereinafter referred to as SII) to customer.

2. Designation

RESONATORS are designated "SC-12S" (32.768 kHz).

3. Shape and dimensions

As per the SC-12 drawing shown on page 5.

4. Electrical characteristics

Specified on page 2 through 3.

5. Shipment and packing

5.1 5,000 pcs are the standard lot size to which the lot number shall be allotted.
5.2 The packing shall conform to the resonator packing standards.

6. Outgoing inspection

6.1 When mutually agreed, the outgoing inspection shall be conducted as per the standard on page 4.
6.2 The outgoing inspection slip is not basically affixed to each packing.

7. Warranty

In the event that any defective RESONATORS or defective lot is found at incoming inspection at customer and that any defect resulting from failure in process-control at SII after incoming inspection is found, good RESONATORS shall be supplied to customer free of charge as the replacement.
In the event that any trouble or problems rising directly from RESONATORS occurs, it will be amicably settled between both parties.
However, the scope of warranty shall be the replacement of good RESONATORS.

8. Revision or abolition of the specifications

Revision or abolition of the specifications shall be made upon mutual consent between customer and SII. If any problem arises, it shall be amicably settled between both parties.

9. Effectiveness of the specifications

These specifications are effective after receipt of returned copies with your approved sign.

10. Controls on substances of environmental concern

Pb-free
Complete Halogen-free
Complies with EU RoHS directive

[1] The maximum rating

	Item	Symbol	Rating	Remark
1	Storage temperature range	T_stg	-55～+125℃	
2	Maximum drive level	DL max.	0.3 μW max.	

[2] Recommended Operating Condition

	Item	Symbol	Rating	Remark
1	Operating temperature range	T_use	-40～+85℃	
2	Drive level	DL	0.1 μW typ.	

[3] Electrical -Characteristics

Measurement temperature: 25±2℃

	Item	Symbol	Specification	Conditions
1	Nominal frequency	f_nom	32.768 kHz	
2	Frequency tolerance	f_tol	$\pm 20 \times 10^{-6}$	
3	Load capacitance *CL spec depend on product spec.	C_L	* 12.5 pF / 9.0pF / 7.0pF / 6.0pF	
4	Motional resistance	R_1	90 kΩ max.	Measured with KEYSIGHT TECHNOLOGIES Impedance analyzer OSC LEVEL = 0.1V
5	Motional capacitance	C_1	8 fF typ.	
6	Shunt capacitance	C_0	1.4 pF typ.	Measured with KEYSIGHT TECHNOLOGIES Impedance analyzer OSC LEVEL = 0.1V
7	Turnover temperature	Ti	25 ± 5℃	Measure this coefficient at 5 points of -40°C, -20°C, 25°C, 60°C, 85°C using Keysight Technologies Impedance analyzer
8	Parabolic coefficient	B	$(-0.036 \pm 10\%) \times 10^{-6}/℃^2$	
9	Frequency aging	f_age	$\pm 5 \times 10^{-6}$/year	25±3℃、First year
10	Insulation resistance	IR	500 MΩ min.	Measured with KEYSIGHT TECHNOLOGIES 4329A Insulation Resistance Meter in between the electrode, and in between the electrode and case. Apply DC100V.

[4] Reliability

	Item	Specifications	Conditions	
1	High temperature storage	$\Delta f/f_0 = \pm 25\times10^{-6}$ $\Delta R1=\pm15k\Omega$	After storage under 125℃ for 1000 hours, measure at room temperature. IEC60068-2-2	*1 *3
2	Low temperature storage	$\Delta f/f_0 = \pm 15\times10^{-6}$ $\Delta R1=\pm10k\Omega$	After storage under -55℃ for 1000 hours, measure at room temperature. IEC60068-2-1	*1 *3
3	High temperature and high humidity storage	$\Delta f/f_0 = \pm 15\times10^{-6}$ $\Delta R1=\pm10k\Omega$	After storage under +85±2℃, 85% RH for 1000 hours, measure at room temperature. IEC60068-2-78	*1 *3
4	Thermal shock resistance	$\Delta f/f_0 = \pm 15\times10^{-6}$ $\Delta R1=\pm10k\Omega$	Measure at room temperature after 100 cycles. -55℃ ⇔ +125℃ for 30 minutes. IEC60068-2-14	*1 *3
5	Mechanical shock resistance	$\Delta f/f_0 = \pm 20\times10^{-6}$ $\Delta R1=\pm10k\Omega$	Measure after 100g-dummy(SII Standard) drop from 1500mm height on the concrete at 3 directions for 10 times each. —	*2
6	Vibration resistance	$\Delta f/f_0 = \pm 15\times10^{-6}$ $\Delta R1=\pm10k\Omega$	Amplitude 1.5mm and 10-60Hz with cycle time 15 minutes in 3 direction (X,Y,and Z axis) each for 2 hours. IEC60068-2-6	*2
7	IR Reflow	$\Delta f/f_0 = \pm 10\times10^{-6}$ $\Delta R1=\pm10k\Omega$	Measure after 2 time reflow under reflow profile specified in page 10. IEC60068-2-58	*1
8	Shear strength	No peeling-off	Pressuring force 10N×10±1sec. IEC60068-2-21	*2
9	Peel strength	No peeling-off	Pressuring force 10N×10±1sec. IEC60068-2-21	*2
10	Bending test	No peeling-off	Bending: 3mm×5±1sec. Thickness of the testing board: 1mm IEC60068-2-21	*2

Note:
1. Each test shall be done independently. (not in series tests)
2. *1: Measure after 24 hours left at room temperature.
3. *2: Measure after 2 hours left at room temperature.
4. *3: Pre conditions
   (1) IR Reflow : 2 times
   (2) Initial values shall be measured after 24 hours at room temperature.

[5] Precautions

(1) Recommended mounting conditions
Reflow profile As per reflow profile shown in page 10.
Manual soldering 350℃max. for 4 sec. max.

(2) Cleaning
The crystal resonator may be destroyed by ultrasonic cleaning.
We don't guarantee the quality of the product with that cleaning method because such conditions as type of the washing machine, power, time, position in the bath, and etc. can not be specified.
Please confirm ultrasonic cleaning is not giving any damage to the product before use when that cleaning method must be used.

[6] Outgoing Inspection Standard

・The outgoing inspection shall be conducted as per the following standard.

・The sampling shall be performed according to the ANSI/ASQC Z1.4-1996.

NO	Item	Sampling level	AQL(%)
1	Frequency tolerance	Standard Ⅰ	1.0
2	Equivalent series resistance	Standard Ⅰ	1.0
3	Outer appearance	Standard Ⅰ	1.5
4	Others characteristics	Periodical quality inspection	

[7] Dimensions and marking layout

1. Out Line Drawing

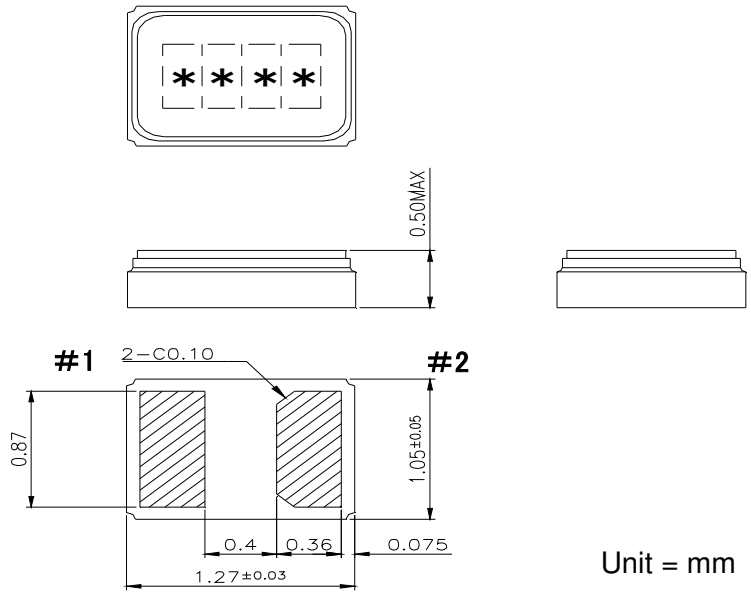

Unit = mm

2. Marking

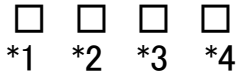

*1 CL (6pF:A, 7pF:B, 9pF:J, 12.5pF:F)
*2 Year of Production(Last digit of year)
*3,*4 Week of Production(01～ 52)

3. Lead Connection

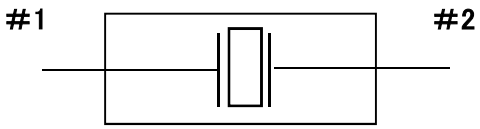

4. Recommended Pad Layout

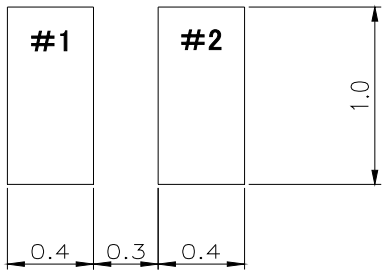

Unit = mm

Please make sure that there is no pattern under SC-12 on the circuit board.

Materials :

Case : Alumina ceramics、Ni-plated、Au-plated

Lid : Kovar material、Ni-plated

[8] Taping specification

1. Drawing of tape dimensions
   ① Carrier tape : Refer to page 8.
   ② Taping reel : Refer to page 9.

2. Material
   ① Carrier tape PC black conductive
   ② Taping reel PS antistatic

3. Taping method
   (1) Taping shall be placed in tapes in such manner as to assure that marking of the components is visible as per Fig.1

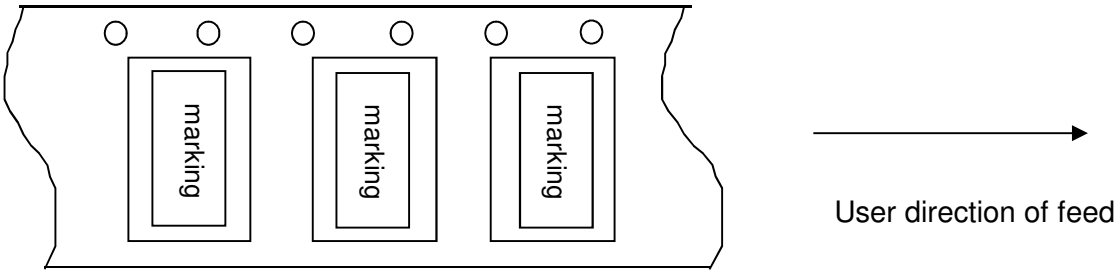

Fig. 1

   (2) Reel
   ① On the side of reel there shall be more than 160 mm of "No components".
   ② The beginning of Carrier Tape shall be bent vertically and hooked on groove of reel.

   (3) Leader
   ① On the side of leader, there shall be more than 160 mm of "No components".
   ② The length of Leader shall be over 400 mm.
   ③ The Length of Stick Tape for Cover Tape shall be about 100 mm and Stick Tape shall never be detached.

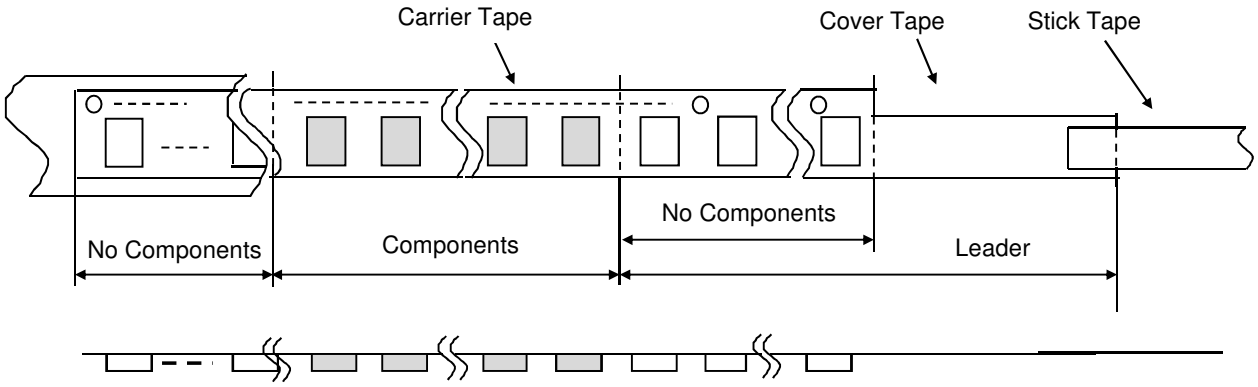

Fig. 2

User direction of feed

（4）Gap between Carrier Tape and Cover Tape
① Cover Tape protrudes from Carrier Tape by 0.5mm max.

Fig. 3

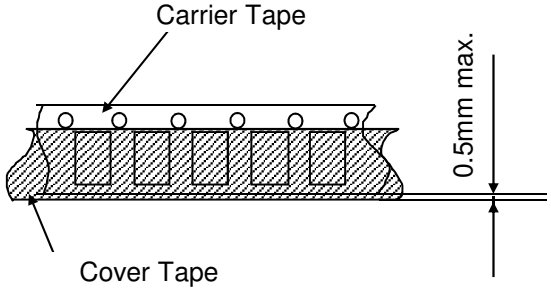

② Holes of Carrier Tape are covered with Cover Tape by 0.75mm max.

Fig. 4

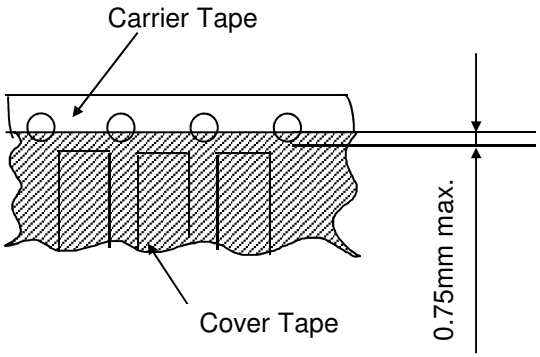

（5）Peel strength
① The method of testing is done as shown below.
② The value of force is at the beginning of desealing.
③ The Cover Tape peel forth shall be 0.1～1.3N at a peel speed of 300±10mm/min.

Fig.5

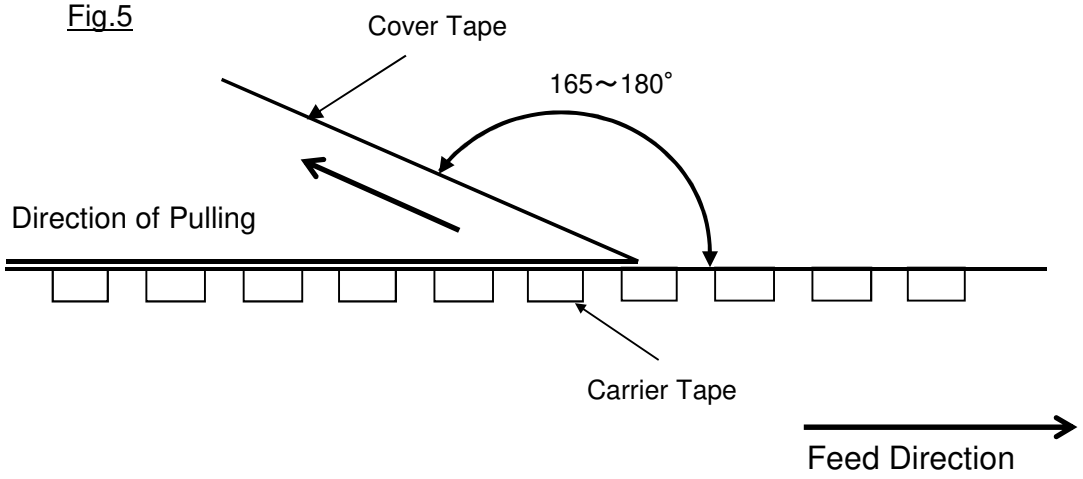

Carrier tape

(1) Conforms with EIA-481

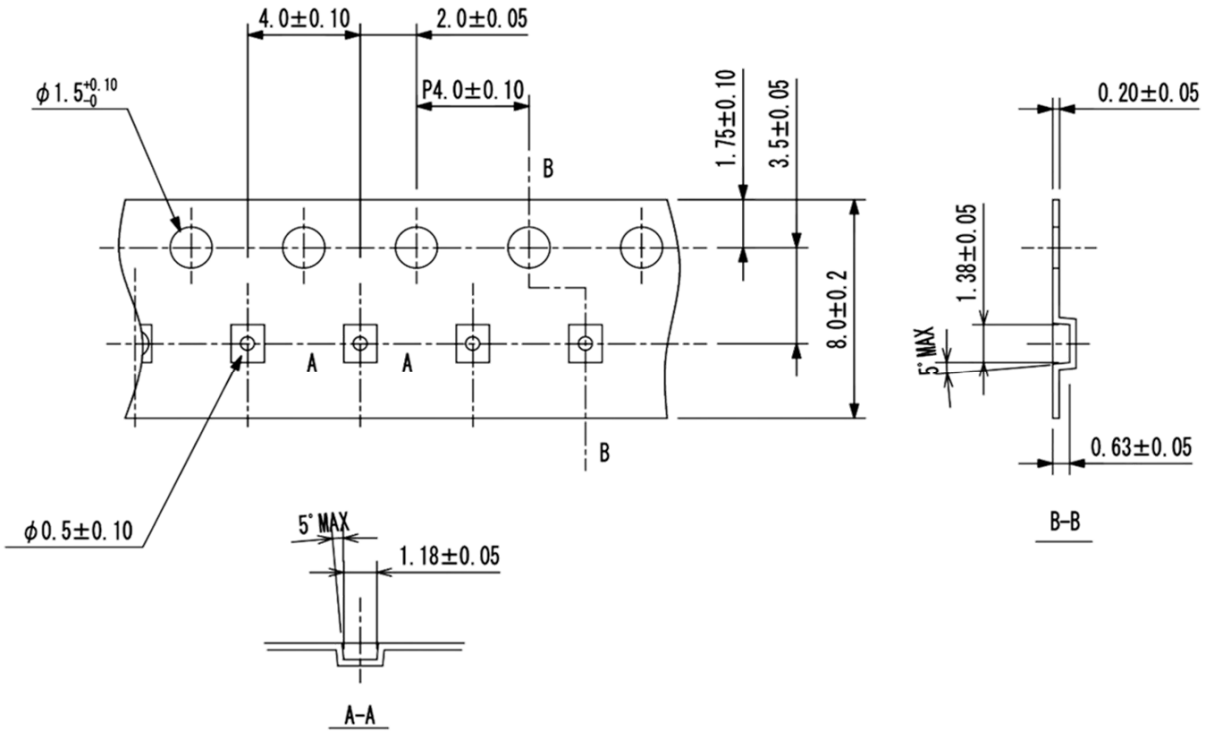

Unit=mm

Taping reel

(1) Conformity with EIAJ ET-7200B

(2) Quantity per reel : 5,000pcs./for a reel

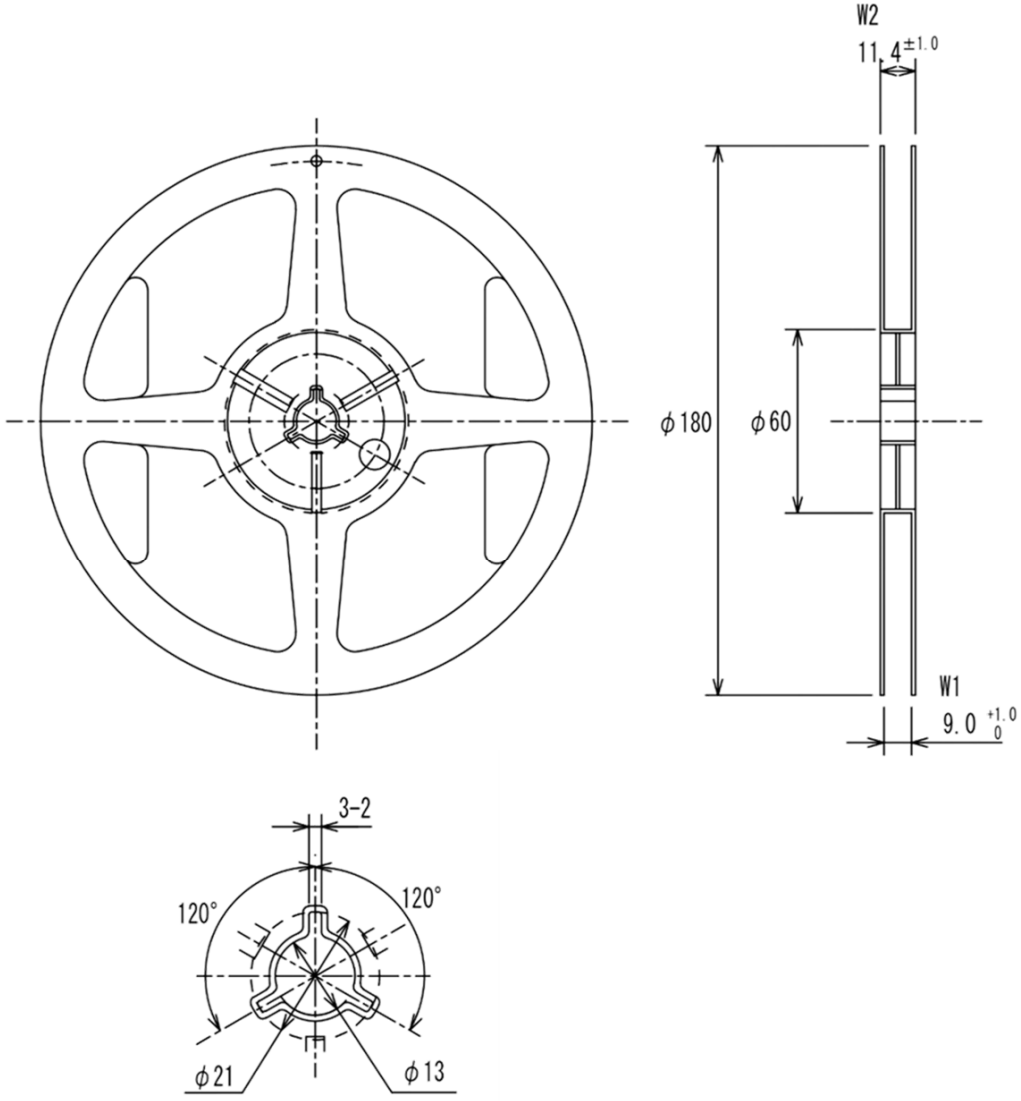

Unit = mm

Item	Specification	Unit
Materials	PS(anti statics)	-
Inside reel width W1	9.0+1.0/-0	mm
Outside reel width W2	11.4±1.0	mm

[9] Reflow Profile

Pre-heating temperature	:	+170℃	Pre-heating time	:	120sec
Heating temperature	:	+220℃	Heating time	:	50sec

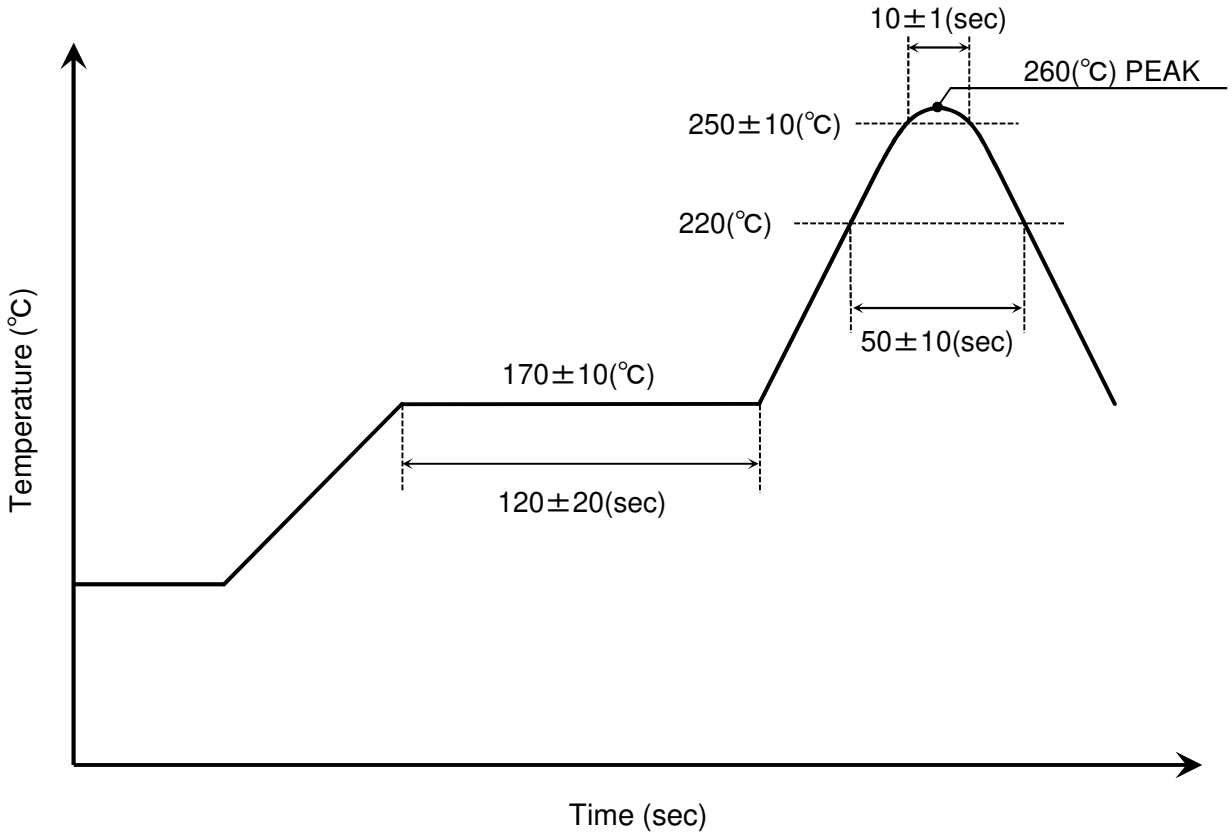

Note:

(1) The temperature used herein means the temperature on the circuit board.

(2) Reflow is permitted 2 times.

[10] Packing Specification

1. A label is attached on each reel.

2. 10 reels are placed in each antistatic polyethylene bag.

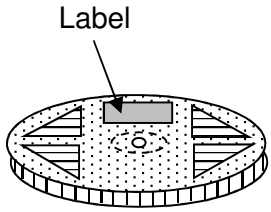

Figure.1

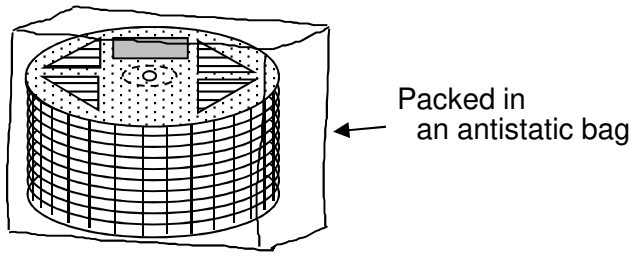

Figure.2

3. Package and reels

10 reels are placed in each inner box.
4 inner boxes are placed in each shipping carton.

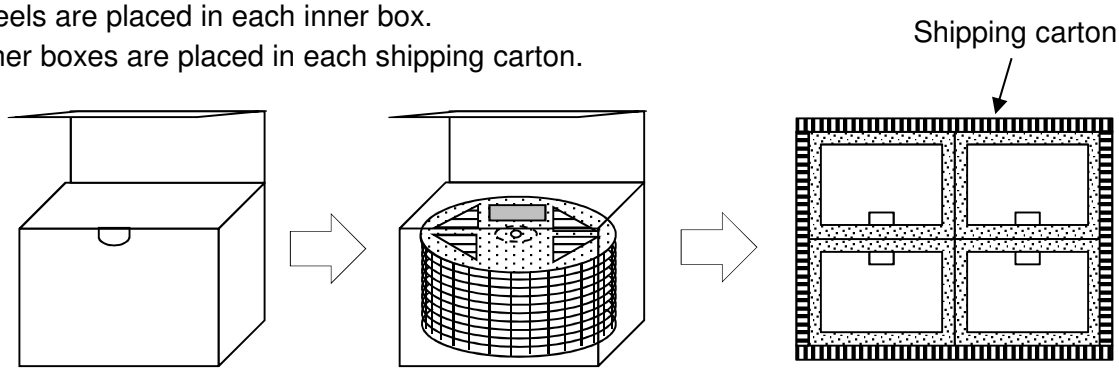

Inner box

4 Inner boxes(Top view)

4. Reel Label (please refer to Figure1, Figure2)

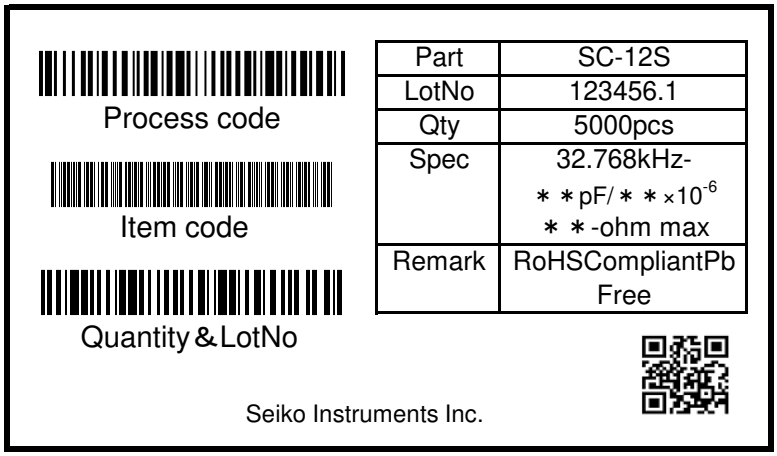

Part	SC-12S
LotNo	123456.1
Qty	5000pcs
Spec	32.768kHz- ＊＊pF/＊＊×10^{-6} ＊＊-ohm max
Remark	RoHSCompliantPb Free

Part : SII product name
Lot No : Lot No
Qty : Quantity
Spec : Frequency, CL,
F0 deviation, R1value

Remark : Environment adaptability, etc.

2 dimensional barcode:
Shipment inspection date
Marking code

5. Storage environment

Please keep the products under the following conditions

Avoid the sunlight
Temperature condition : +15 to 35 ℃
Humidity condition : 25 to 85%RH